KLINGER Fluid Control

KLINGER BALLOSTAR® KHI

DN 150 – 1000





www.klinger.kfc.at

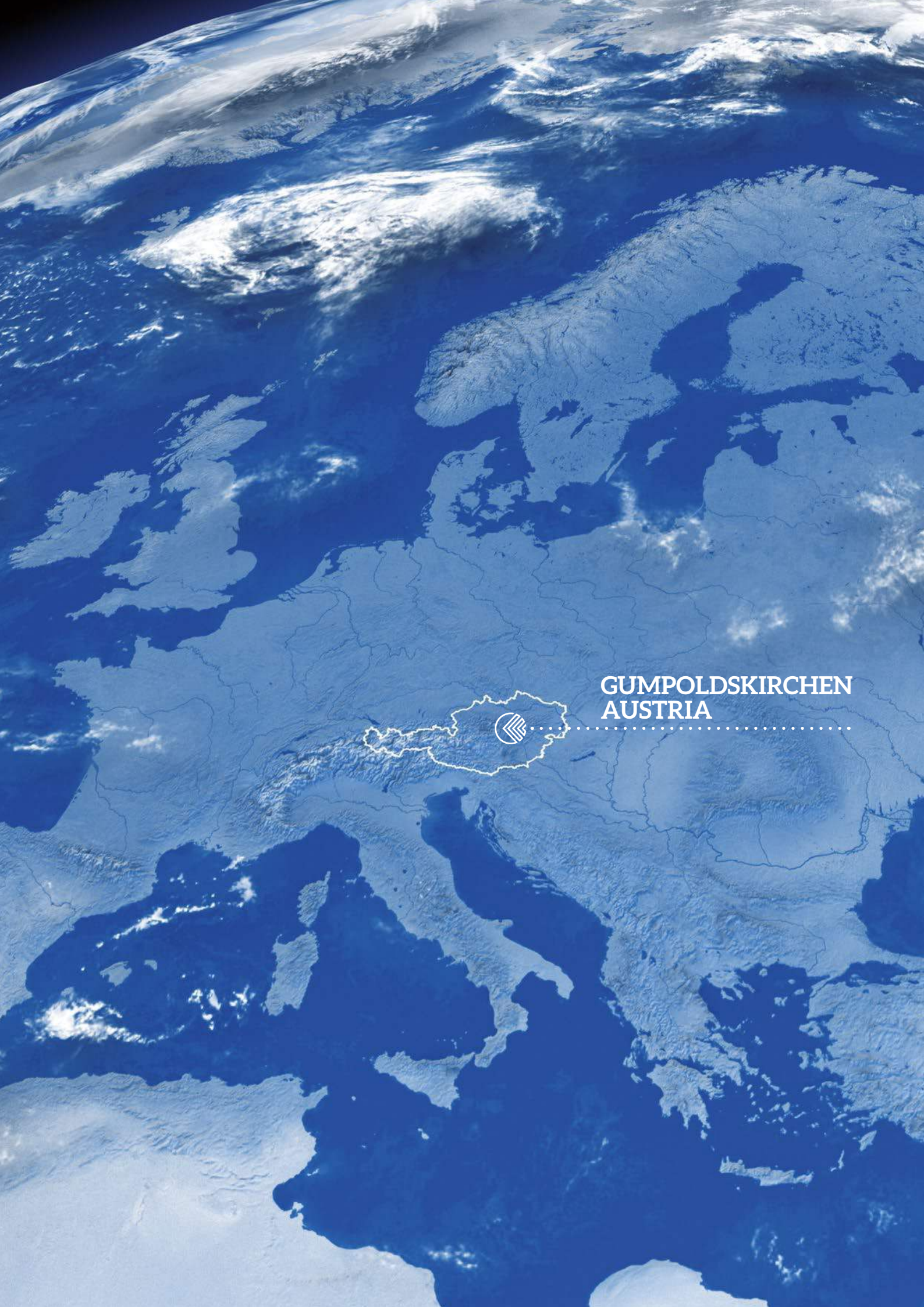
GUMPOLDSKIRCHEN
AUSTRIA

KLINGER FLUID CONTROL

Today for tomorrow

As a subsidiary of the KLINGER Group, KLINGER Fluid Control has been developing, manufacturing and maintaining high-quality industrial valves at the business location Gumpoldskirchen/Austria for more than 140 years. Via the global distribution and service network, KLINGER Fluid Control offers both standardized and tailored products, services as well as solutions for customers around the globe.

Products from KLINGER Fluid Control are characterized by their high level of reliability as well as by an above average lifecycle at a simultaneously very low total cost of ownership (TCO). As a solutions partner, KLINGER Fluid Control creates customer benefits with added value. In this regard, the focus is on the following core competences:







ENCOMPASSING SERVICE

» Application expertise
» Product trainings
» Fast quotation and order processing
» Customer-specific special solutions
» Supply of spare parts
» Valve maintenance
» On-site technical support

INNOVATIVE SOLUTIONS

» State of the art development tools
» Product development for different areas of application
» Automation solutions
» Compilation of customer-specific special solutions
» Product tests in the company-own technical center
» A wide range of certificates and approvals

OPERATIONAL EXCELLENCE

» Flexible production
» Transparency in the supply chain
» Short delivery times
» ISO 9001 certified quality management system
» ISO 14001 as well as EMAS certified environmental management system

BALLOSTAR®
KHI

Flanged ends

KHI-F
Stainless steel DN 150–400 **14**

KHI-F
Carbon Steel DN 150–400 **16**





KHI
Carbon Steel DN 500–800
(illustration with drain valve) **18**



BALLOSTAR®
KHI

Welded ends

KHI-S
Carbon Steel DN 150–400 **20**

KHSVI
Carbon Steel DN 500–1000
(illustration with drain valve) **22**





KHSVI with reducing cones* **24**
Carbon Steel DN 600/500–1200/1000

KHSVI VVS fully welded** **26**
Carbon Steel DN 150–800





* more dimensions on request

** reducing cones on request possible

GUARANTEED DURABILITY

Flanged versions for small nominal diameters DN 150–400

PRODUCT ADVANTAGES KHI-F

- Maintenance-free
- Bi-directional sealing
- Trunnion mounted ball with cylindrical bore
- Supports pressurization on both sides
- Sealing elements protected against water hammers
- High degree of resilience against pipework forces
- Double block and bleed with optional drain valve
- Subsequent automation possible (top flange in acc. with EN ISO 5211)
- Leakage rate A (EN 12266-1/ISO 5208) soft seated
- Leakage rate Class IV-S1 (EN 60534-4) metal seated
- Metal seat for abrasive media
- Anti blow out stem
- Anti static tested
- Oxygen version
- Fire safe version
- Gas version
- Oil, grease and silicone-free

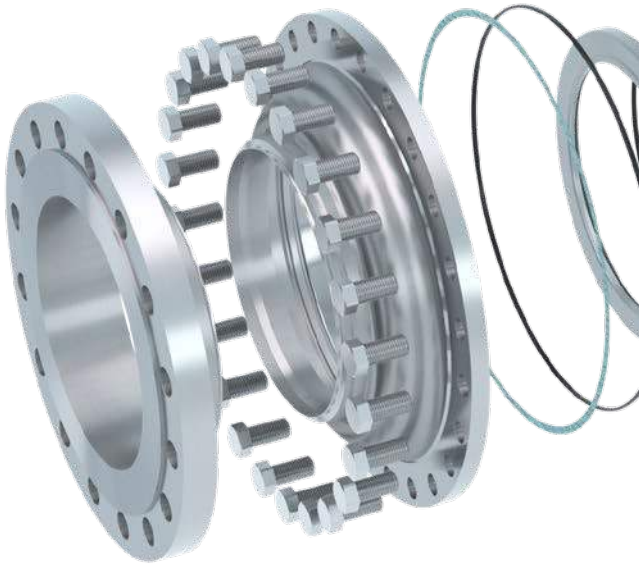

PRODUCT DETAILS KHI-F

PN	10/16/25/40, ASME CL 150/300
DN	150 – 400, 6" – 16"
Material	Stainless steel, duplex, carbon steel
Temperature	-45°C to +250°C depending on O-ring material
Design	Flanges
Type	Two-piece ball valve with full bore
FTF dimensions	PN 10/16/25 + CL150 → EN 558-1 row 12/ANSI B16.10 long pattern PN 40 + CL 300 → EN 558-1 row 4/ANSI B16.10 long pattern



Ballostar® KHI-F
Two-piece body
Flanged ends on both sides



Stainless steel and carbon steel
available in DN 150–400

GUARANTEED DURABILITY

Flanged versions for large nominal diameters DN 500–1000

PRODUCT ADVANTAGES KHI

- Maintenance-free
- Bi-directional sealing
- Trunnion mounted ball with cylindrical bore
- Supports pressurization on both sides
- Sealing elements protected against water hammers
- High degree of resilience against pipework forces
- Double block and bleed with optional drain valve
- Subsequent automation possible (top flange in acc. with EN ISO 5211)
- Leakage rate A (EN 12266-1/ISO 5208) soft seated
- Metal seat for abrasive media
- Anti blow out stem
- Anti static tested
- Oxygen version
- Fire safe version
- Gas version
- Oil, grease and silicone-free

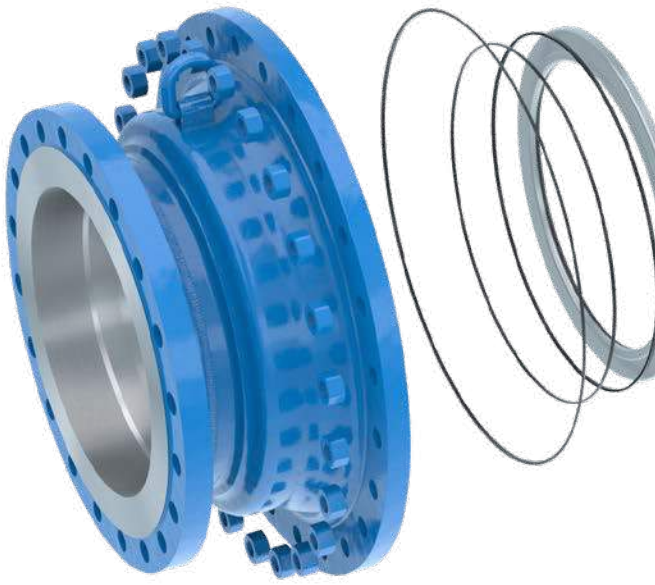

PRODUCT DETAILS KHI

PN	10/16/25/40
DN	500 – 1000
Material	Carbon Steel
Temperature	-45°C to +200°C
Design	Flanges
Type	Two-piece ball valve with full bore

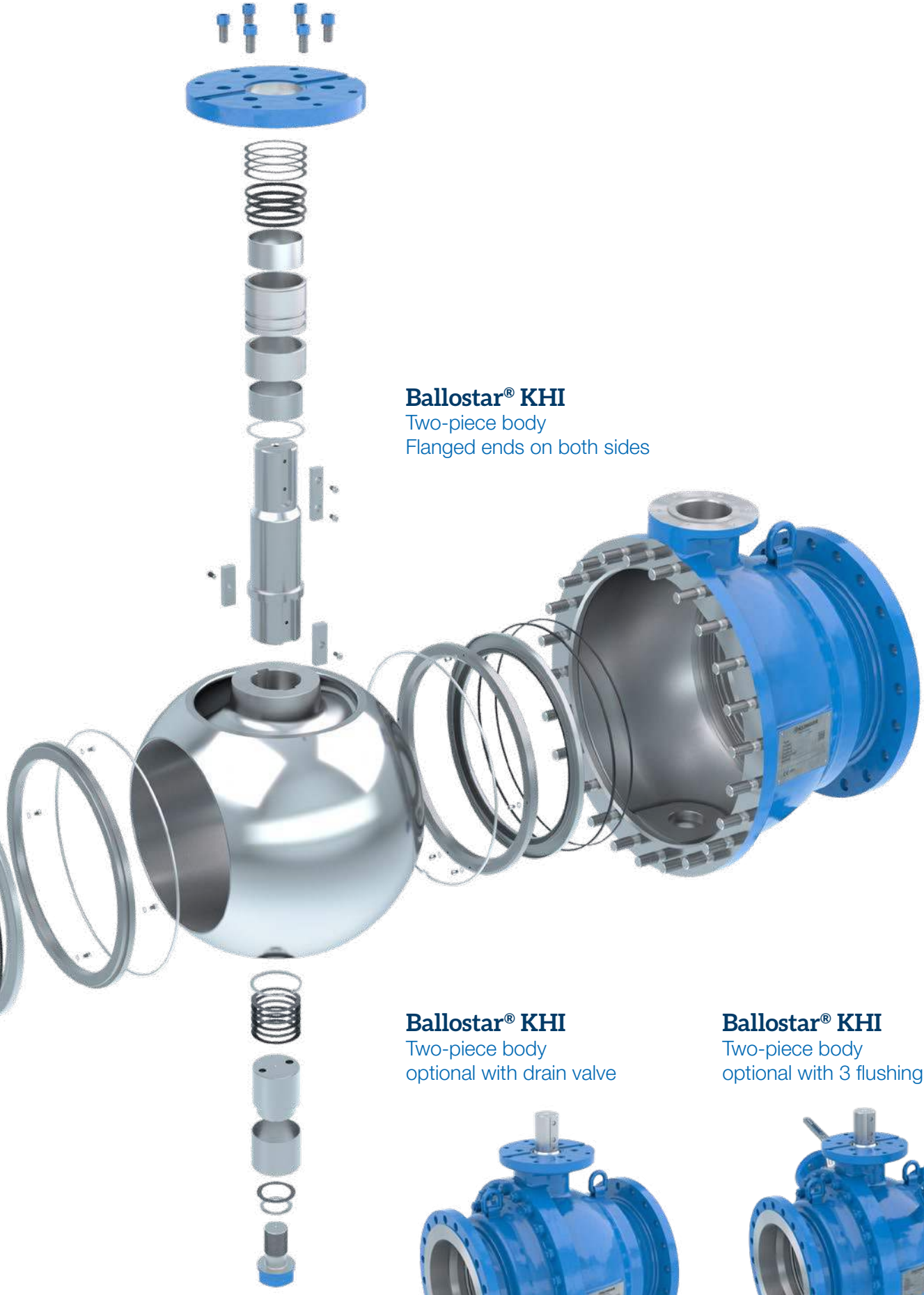

Ballostar® KHI
Two-piece body
Flanged ends on both sides

Ballostar® KHI
Two-piece body
optional with drain valve

Ballostar® KHI
Two-piece body
optional with 3 flushing valves



GUARANTEED DURABILITY

Welded versions in detail
DN 150–1000

PRODUCT ADVANTAGES KHI-S | KHSVI | KHSVI VVS

- Maintenance-free
- Bi-directional sealing
- Trunnion mounted ball with cylindrical bore
- Supports pressurization on both sides
- Sealing elements protected against water hammers
- High degree of resilience against pipework forces
- Double block and bleed with optional drain valve
- Subsequent automation possible (top flange in acc. with EN ISO 5211)
- Leakage rate A (EN 12266-1/ISO 5208) soft seated
- Leakage rate Class IV-S1 (EN 60534-4) metal seated (KHI-S)
- Metal seat for abrasive media
- Anti blow out stem
- Anti static tested
- Oxygen version
- Fire safe version
- Gas version
- Oil, grease and silicone-free
- Certified acc. to EHP 003 (EN 488-1) for KHSVI VVS

PRODUCT DETAILS KHI-S

PN	10/16/25/40, ASME CL 150/300
DN	150–400
Material	Carbon Steel
Temperature	-45°C to +250°C
Design	Welding ends
Type	Two-piece ball valve with full bore



PRODUCT DETAILS KHSVI | KHSVI VVS

PN	10/16/25/40
DN	KHSVI 500–1000 | KHSVI VVS 150–800
Material	Carbon Steel
Temperature	KHSVI -45°C to +200°C KHSVI VVS -45°C to +250°C
Design	Welding ends, fully welded (VVS), reducing cones, full bore
Type	Two-piece ball valve KHSVI Single-piece ball valve KHSVI VVS

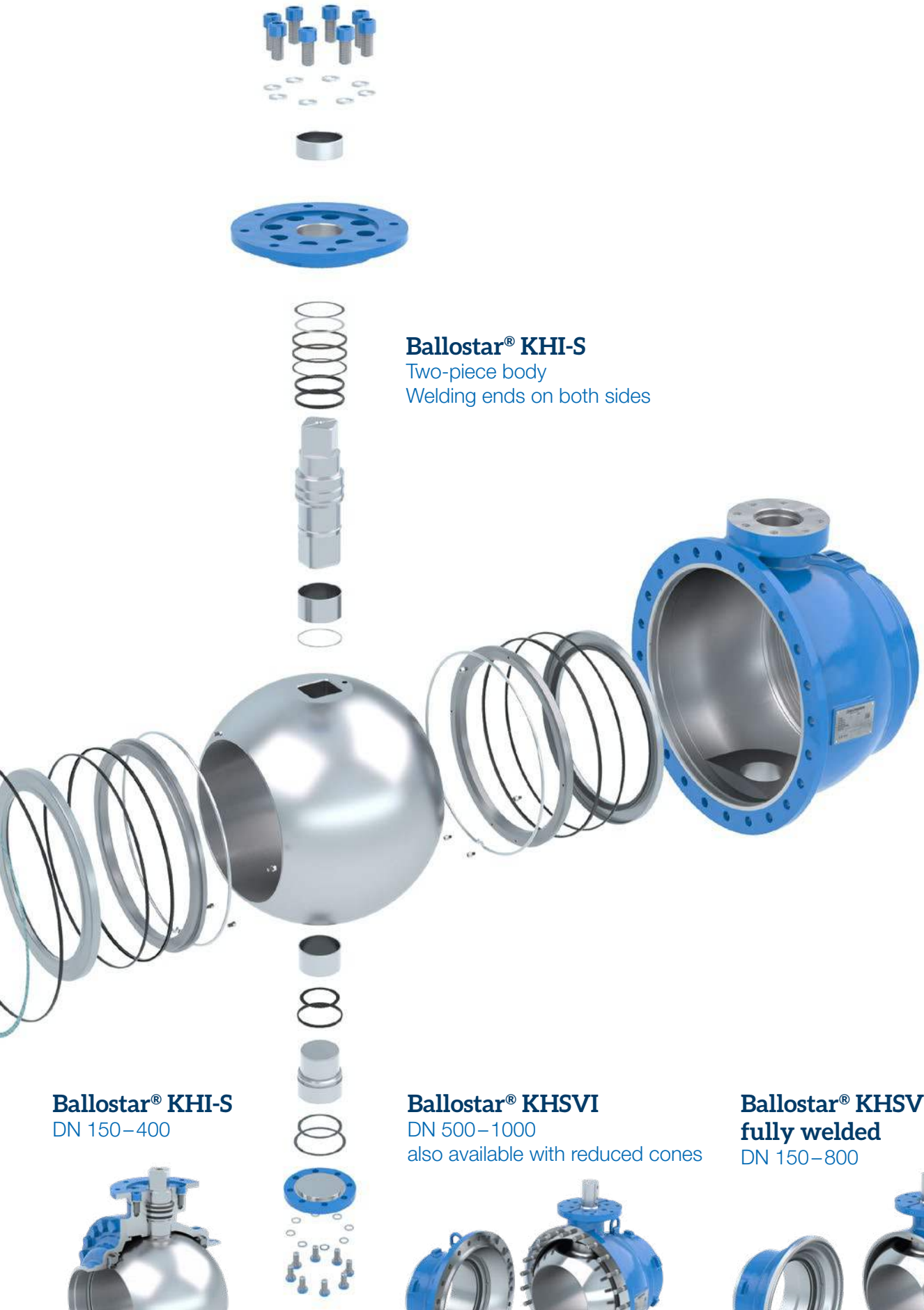

Ballostar® KHI-S
Two-piece body
Welding ends on both sides

Ballostar® KHI-S
DN 150–400

Ballostar® KHSVI
DN 500–1000
also available with reduced cones

Ballostar® KHSVI VVS fully welded
DN 150–800



GREATEST SAFETY

Ballostar® KHI sealing system

Leakages represent the worst case for any plant operator. Negative impacts on the environment as well as downtimes,harm to personnel and assets and in some cases heavy financial losses are just a few of the possible outcomes. A seal, which therefore “practices what it preaches”, i.e. a valve capable of reliably fulfilling its shut-off function, is a must. With the KLINGER Ballostar® KHI, this is ensured in multiple ways: By means of the unique ball valve sealing system and the “Double Block and Bleed” function.

FUNCTION

Thanks to its “elastic sealing system” the ball valve ensures absolute tightness in combination with both high and low pressures. This is achieved by means of two elastic sealing elements working independent of each other. As the differential pressure increases, the additional contact forces also increase – the pre-stressed diaphragm springs, which press the sealing rings against the ball, are relaxed and the operating life thus further extended. (Fig. 1)

EFFECT

The sealing system at the ball is pre-stressed during assembly. The two pre-stressed elastic sealing elements made of stainless steel and featuring sealing rings and a back seal (consisting of a U-sleeve and an O-ring) form a system upstream and downstream of the valve together with the ball. Furthermore, a support ring protects the elastic sealing element against overloads, for example caused by water hammers. A wire ring safeguards the sealing unit. (Fig. 2)

The ball valve can be pressurized in both flow directions. The elasticity of the sealing elements allows for a compensation of thermal expansion. Thanks to this function, two primary sealed areas are constantly present in the bore.

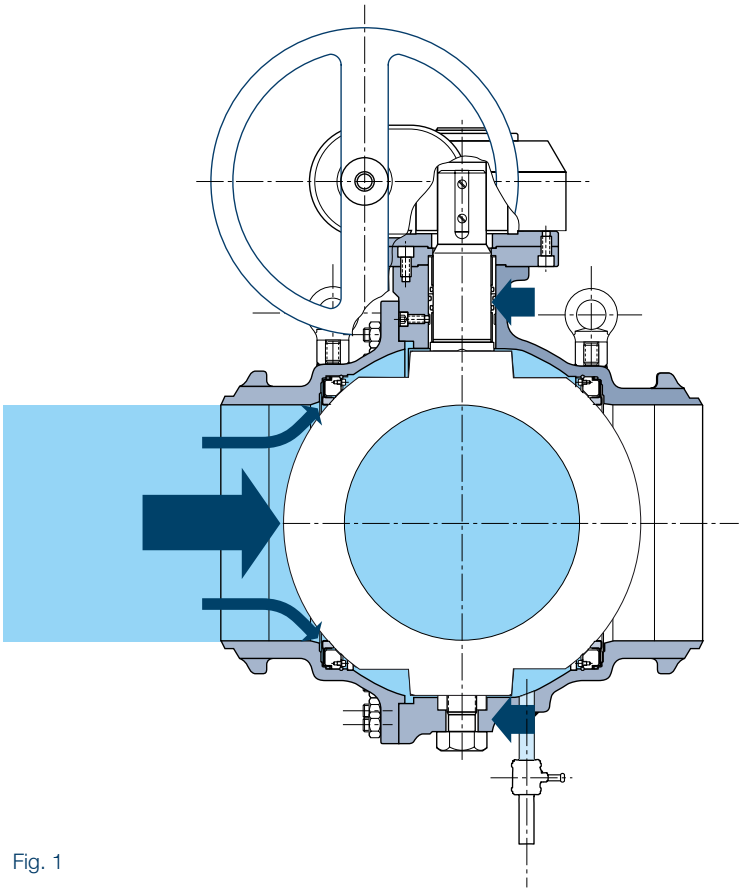

Fig. 1

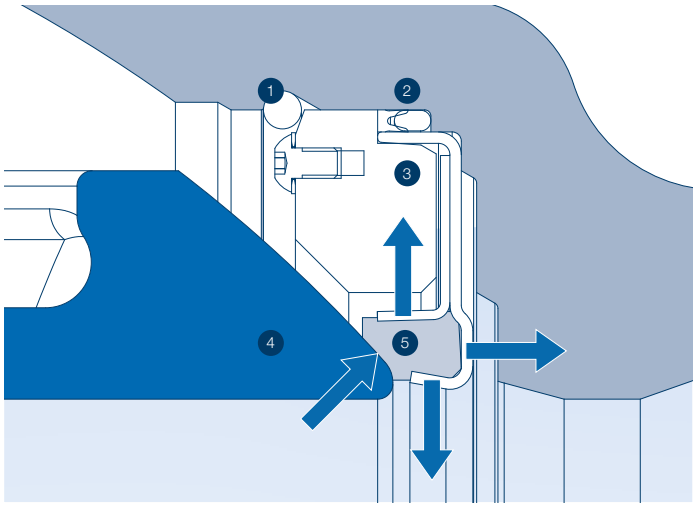

1. Wire ring
2. U-sleeve, O-ring
3. Support ring
4. Ball
5. Sealing ring

Fig. 2

DOUBLE BLOCK & BLEED

A “Double Block & Bleed” configuration is usually achieved by means of two separate valves. The same effect, however, can be achieved by utilizing a single KLINGER Ballostar® KHI ball valve. Next to saving time and money, this solution is of enormous importance in tight installation fits. With regard to safety and tightness the KLINGER Ballostar® KHI – in comparison to standard “Double Block & Bleed” solutions – convinces in both flow directions, under a wide range of operating conditions and even in a vacuum. Furthermore, pressurization by the medium is not restricted to the surface of the ball of Ballostar® KHI ball valves, but covers the entire sealing element (ball and surface of the diaphragm spring).

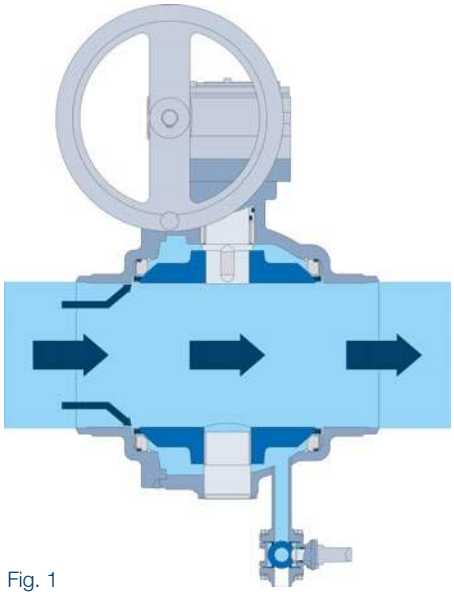

Fig. 1

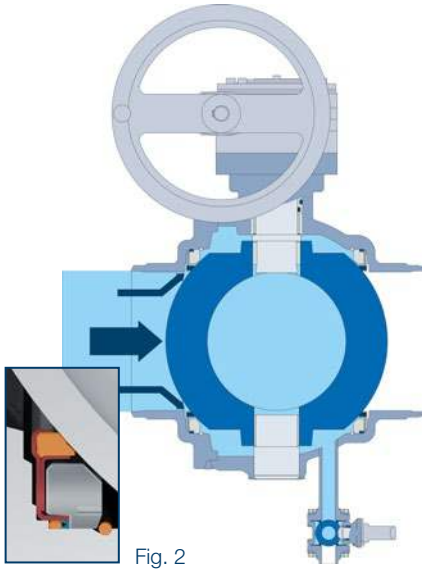

Fig. 2

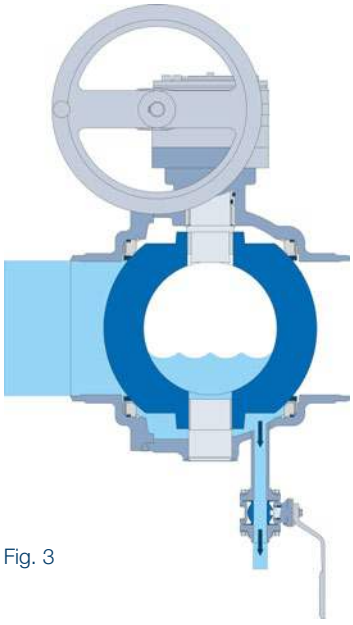

Fig. 3

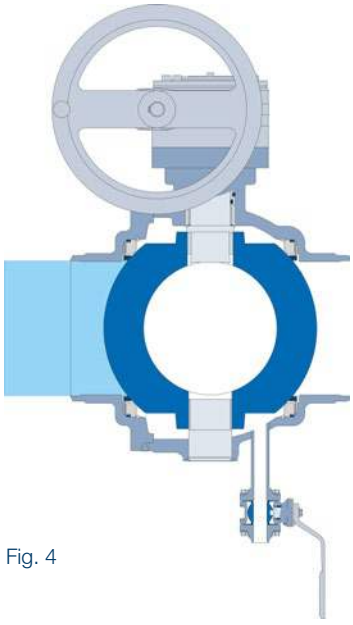

Fig. 4

FUNCTION

The open valve (Fig. 1) represents the starting point for the explanation of the function of the Ballostar® KHI: The medium flows through the open ball with the test and drain valve closed. Now the ball valve is closed (Fig. 2), the medium collects in the cavity of the ball valve as a result of the closing process. Draining is achieved by means of opening the test and drain valve (Fig. 3). This configuration state also allows for quick and uncomplicated testing of the function of the sealing element: The cavity has been drained, the sealing elements ensure the tightness of the valve – additional leakage of the medium is therefore impossible. If required, and as long as the ball valve remains closed and the test and drain valve open (Fig. 4), the pipe section on the medium-free side can now be opened up and/or worked on without hazard.

CERTIFIED QUALITY

The KLINGER Ballostar® KHI keeps its promises

KLINGER Ballostar® ball valves are designed for the toughest and most demanding applications in a wide variety of industries. The various possible applications leave no questions unanswered.This is evidenced by various tests and certifications – for plant operators, this means absolute operational reliability with guaranteed leak tightness.

» **Standard version Fire-Safe für DN 150–400 & VVS**
The ball valve can be used for fire-safe applications and is certified according to API Standard 607 and EN ISO 10497.

» **Double Block & Bleed**
Test certificate for the leak test on the version with a test/ drain cock (‘double block & bleed’) in accordance with ISO 5208 / ISO 14313.

» **Use with gaseous oxygen**
The Ballostar® KHI series are suitable for applications with gaseous oxygen – at operating pressures up to 16 bar for cast steel, up to 40 bar for stainless steel and at operating temperatures up to 60°C (BAM product assessment).

» **Gas approval**
ÖVGW Certificate for authorization to display the ÖVGW quality label "Gas" for the ball valves GKHI, GKHSVI and GKHSVI VVS, DN 150–800, KHI-F and KHI-S.

» **Emission testing in accordance with VDI 2440**
Certified emission testing pursuant to VDI 2440 for Ballostar® KHI/KHSVI ball valves at temperatures <250°C.

» **EN ISO 15848-1**
The KLINGER Ballostar® KHI-F and KHI-S ball valves are significantly below the prescribed emission limits for air pollution control. They have undergone certified emission tests according to ISO 15848-1 (fugitive emissions) and ISO FE CH-C03-SSA0-tRT (120°C) and meet the requirements of the TA-Luft (Technical Instructions on Air Quality Control).

» **Pressure Equipment Directive 2014/68/EU**
The Ballostar® KHI ball valves are developed, produced, tested and delivered in accordance with the valid standards of the Pressure Equipment Directive 2014/68/EU.

» **EN 12266-1, P10, P11 and P12**
The Ballostar® KHI ball valves with KFC sealing elements meet leakage rate A according to EN 12266-1/ISO 5208 in the case of soft sealing design and leakage rate class IV-S1 according to EN 60534-4 in the case of metal sealing design.

» **EHP 003 (EN 488-1) für KHSVI VVS**
KLINGER Ballostar® KHSVI VVS ball valves, DN 150–800, have been successfully tested and certified by the TÜV Austria under inclusion of the extended requirements of the EHP 003 (EN 488-1).



BALLOSTAR®
KHI-F

Flanged ends, stainless steel, DN 150–400

GENERAL FEATURES
- Two-piece ball valve with full bore
- Trunnion mounted
- Bi-directional sealing
- Top flange acc. ISO 5211
- Leakage rate A (EN 12266-1/ISO 5208) soft seated
- Leakage rate Class IV-S1 (EN 60534-4) metal seated
- Double Block & Bleed with optional drain valve
- Anti blow out stem
- Anti static tested
- Maintenance-free O-ring system

CONNECTIONS
Flange in acc. with EN 1092-1 or ASME B16.5

ACCEPTANCE TESTING
- Seat leak tightness: EN 12266-1 P12; leakage rate A
- Tightness to atmosphere: EN 12266-1 P11
- Strength: EN 12266-1 P10

AUTOMATION
Flange connection in accordance with ISO 5211, allows for direct mounting of an actuator or by means of brackets. Pneumatic and electrical actuators utilizable.

TEMPERATURE
-45°C to +250°C depending on O-ring material (see pT diagram)

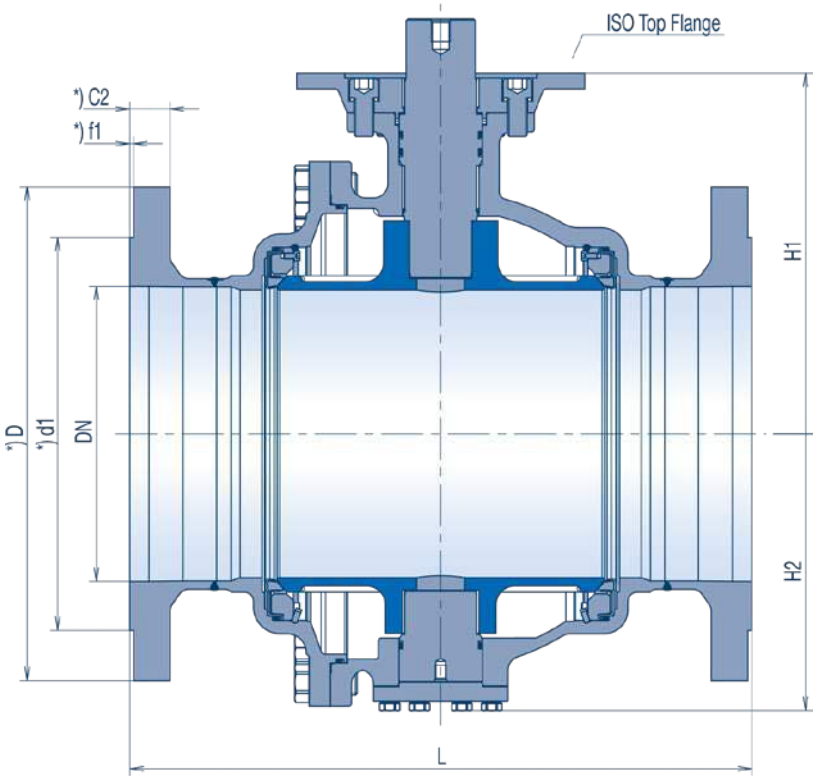

KHI-F VARIANTS

FULL BORE DN 150–400 | Material: Stainless steel (M2), Duplex (M3)

DN (ASME)	DN (mm)	Dimensions					Top Flange	Weight in kg	Shaft		
		L (mm)		O	H1	H2	ISO 5211 not double drilled		Square	Diameter	Key
		PN 10-25** CL 150	PN 40*** CL 300								
6"	150	394	403	320	232	167	F14/F16	71	36 (Standard)	48	14
8"	200	457	502	398	273	209	F14/F16	120	36 (Standard)	48	14
10"	250	533	568	490	349	261	F16/F25	200	46 (Standard)	60	18
12"	300	610	648	568	376	289	F25/F30	288	55	72	20 (Standard)
14"	350	686	762	660	440	346	F25/F30	414	55	72	20 (Standard)
16"	400	762	838	700	442	359	F25/F30	534	55	72	20 (Standard)

** acc. to EN 558-1 row 12 / ANSI B16.10 long pattern | *** acc. to EN 558-1 row 4 / ANSI B16.10 long pattern

Dimensions in mm. Subject to modification of design and dimensions.

BALLOSTAR® KHI-F

Flanged ends, stainless steel, DN 150–400

Material index M2

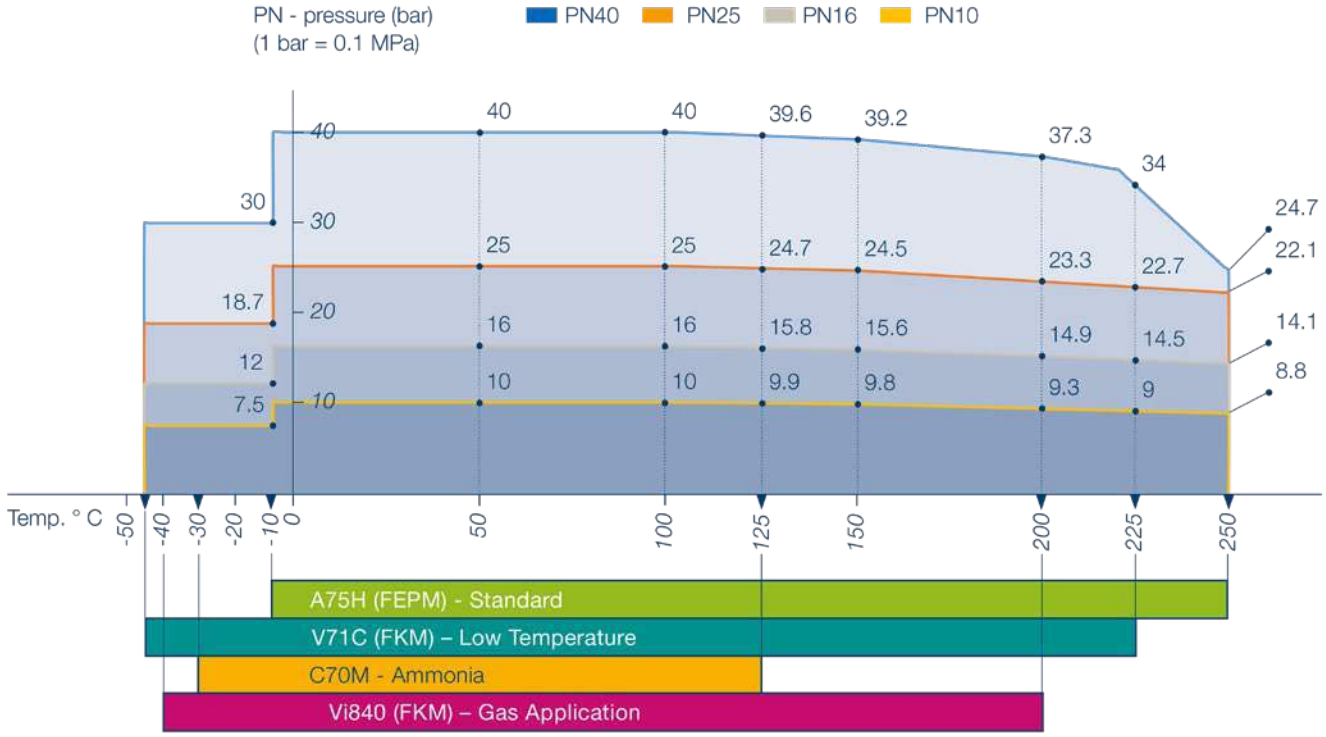

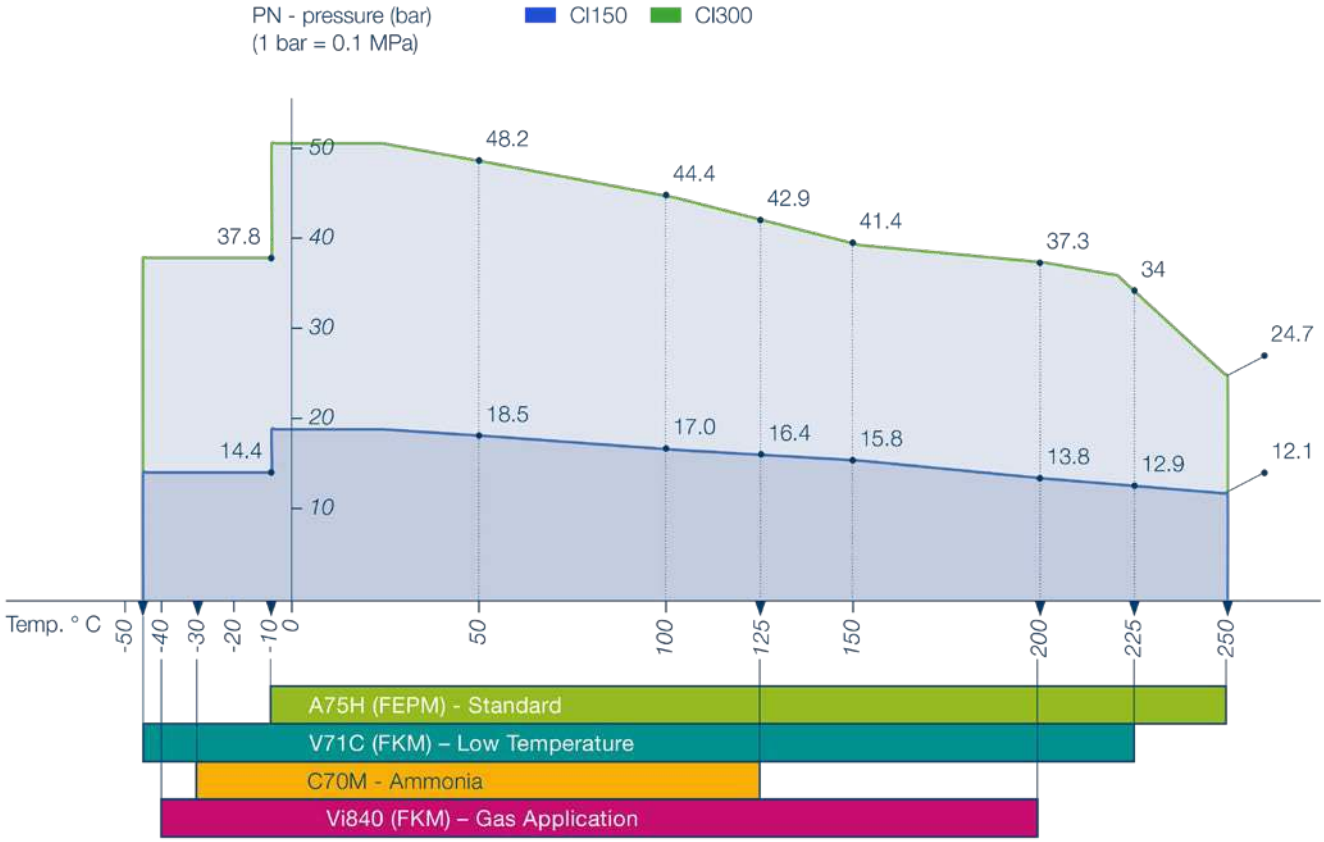

BALLOSTAR® KHI-F

Flanged ends, duplex, DN 150–400

Material index M3

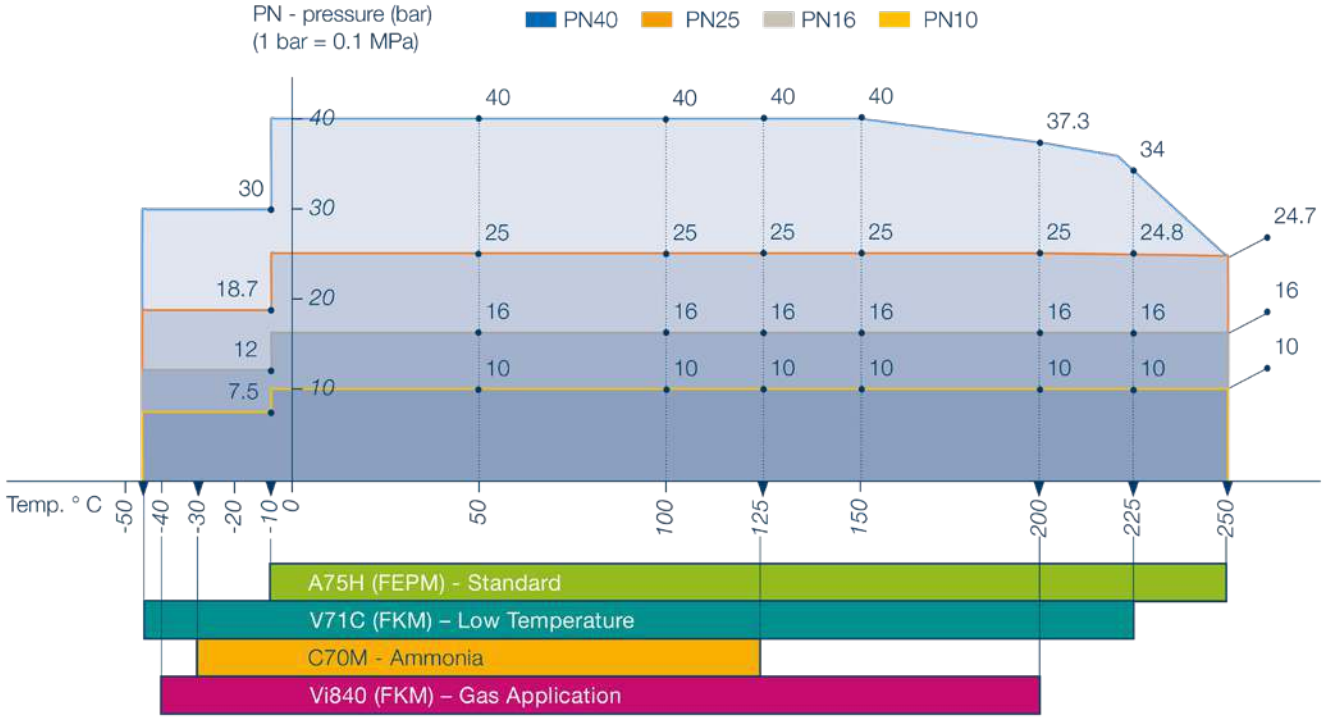

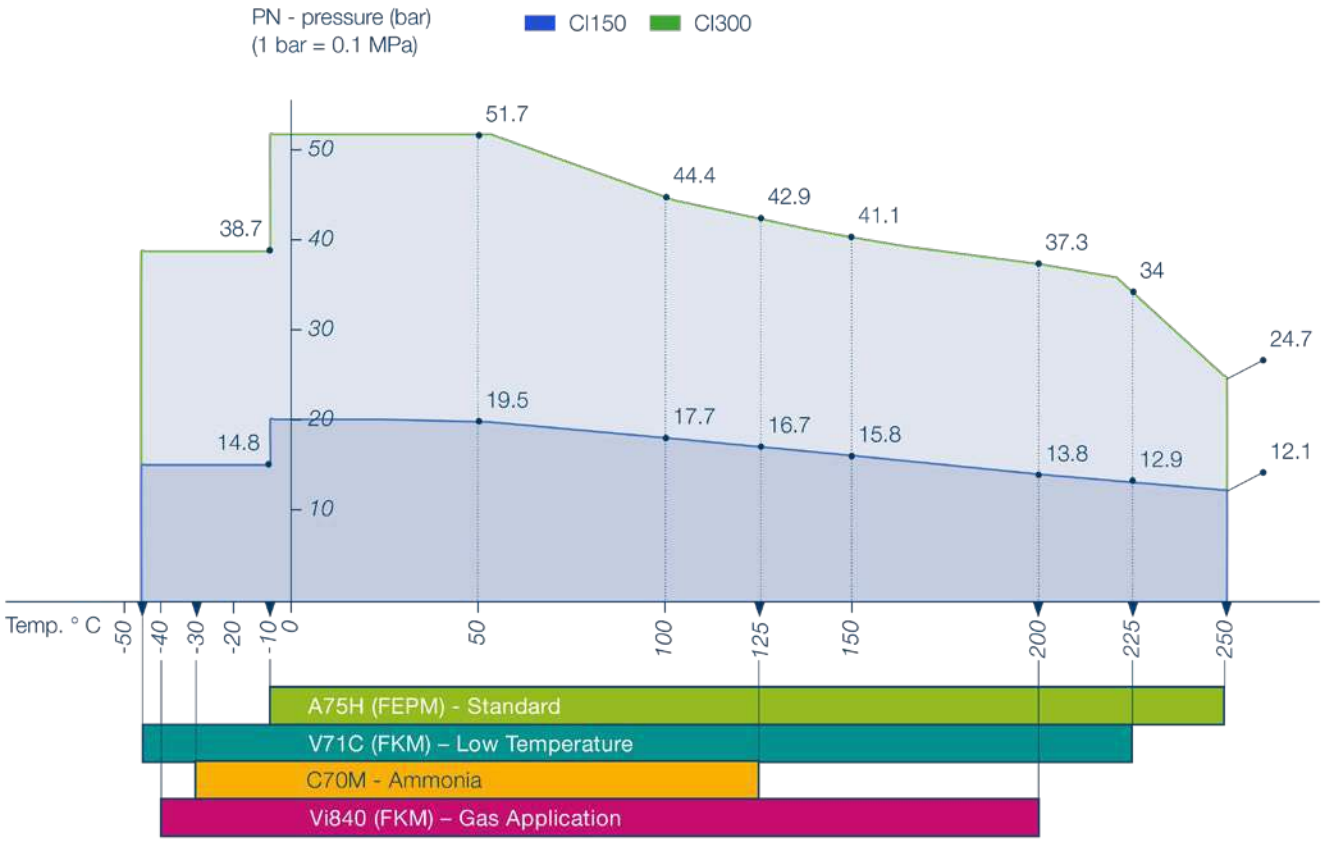

BALLOSTAR®
KHI-F

Flanged ends, carbon steel, DN 150–400

GENERAL FEATURES
- Two-piece ball valve with full bore
- Trunnion mounted
- Bi-directional sealing
- Top flange acc. ISO 5211
- Leakage rate A (EN 12266-1/ISO 5208) soft seated
- Leakage rate Class IV-S1 (EN 60534-4) metal seated
- Double Block & Bleed with optional drain valve
- Anti blow out stem
- Anti static tested
- Maintenance-free O-ring system

CONNECTIONS
Flange in acc. with EN 1092-1 or ASME B16.5

ACCEPTANCE TESTING
- Seat leak tightness: EN 12266-1 P12; leakage rate A
- Tightness to atmosphere: EN 12266-1 P11
- Strength: EN 12266-1 P10

AUTOMATION
Flange connection in accordance with ISO 5211, allows for direct mounting of an actuator or by means of brackets. Pneumatic and electrical actuators utilizable.

TEMPERATURE
-45°C to +250°C depending on O-ring material (see pT diagram)

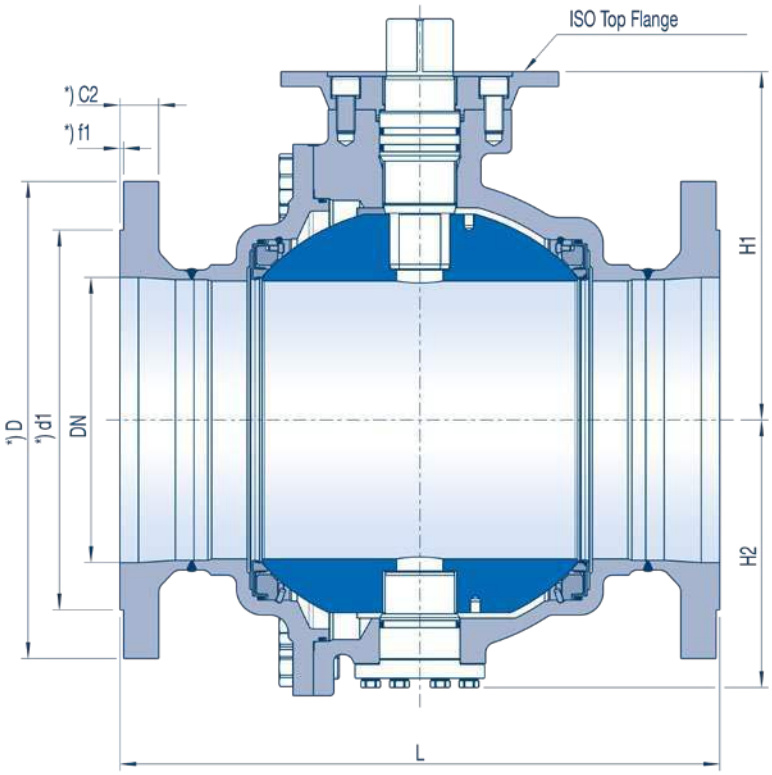

KHI-F VARIANTS

FULL BORE DN 150–400 | Material: Carbon steel 1.0619 (M1)

DN (ASME)	DN (mm)	Dimensions					Top Flange	Weight in kg	Shaft		
		L (mm)		O	H1	H2	ISO 5211 not double drilled		Square	Diameter	Key
		PN 10-25** CL 150	PN 40*** CL 300								
6"	150	394	403	326	232	167	F14/F16	90	36 (Standard)	48	14
8"	200	457	502	404	273	209	F14/F16	155	36 (Standard)	48	14
10"	250	533	568	500	349	261	F16/F25	270	46 (Standard)	60	18
12"	300	610	648	595	376	289	F25/F30	444	55	72	20 (Standard)
14"	350	686	762	670	440	346	F25/F30	632	55	72	20 (Standard)
16"	400	762	838	720	442	359	F25/F30	800	55	72	20 (Standard)

** acc. to EN 558-1 row 12 / ANSI B16.10 long pattern | *** acc. to EN 558-1 row 4 / ANSI B16.10 long pattern

Dimensions in mm. Subject to modification of design and dimensions.

BALLOSTAR®
KHI-F

Flanged ends, carbon steel, DN 150–400

Material index M1

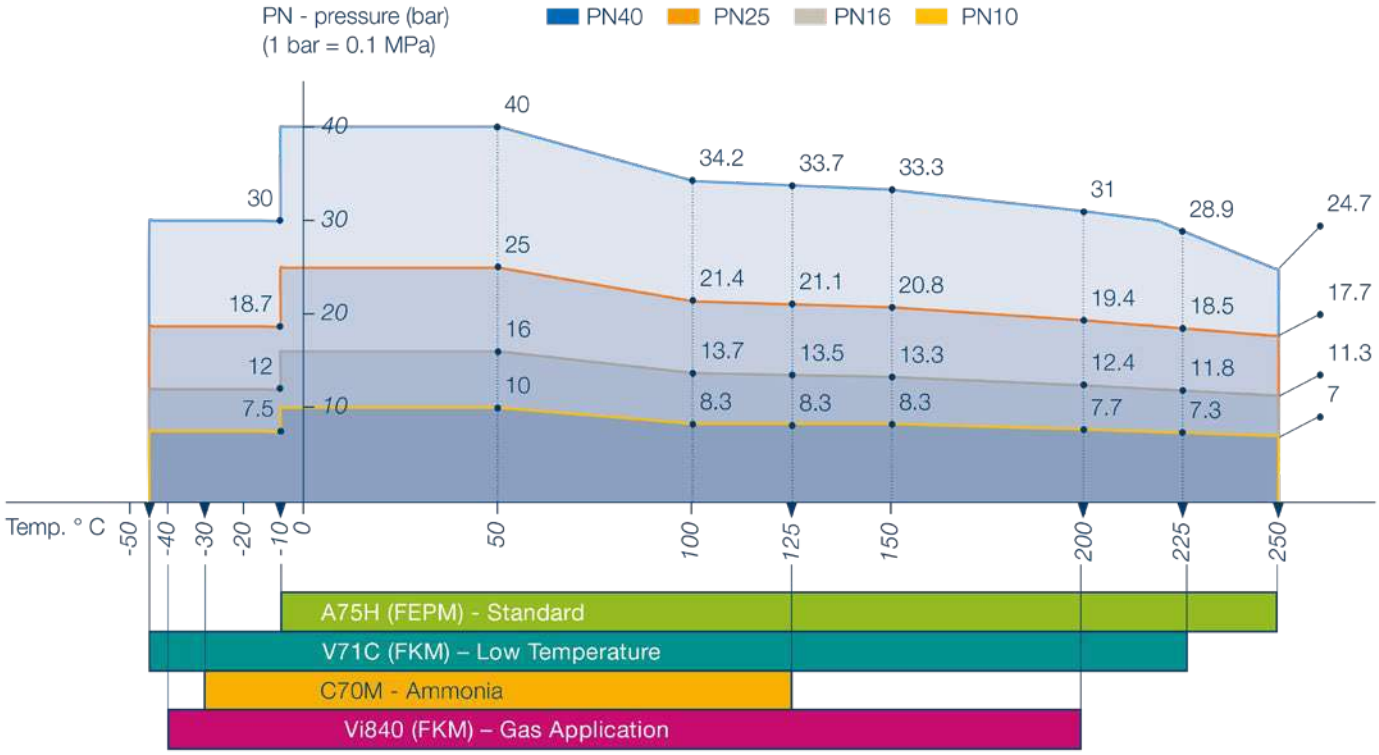



BALLOSTAR®
KHI

Flanged ends, carbon steel, DN 500–1000

GENERAL FEATURES
» Two-piece ball valve with full bore
» Trunnion mounted
» Bi-directional sealing
» Top flange acc. ISO 5211
» Leakage rate A (EN 12266-1/ISO 5208) soft seated
» Double Block & Bleed with optional drain valve
» Anti blow out stem
» Anti static tested
» Maintenance-free O-ring system

CONNECTIONS
Flange in acc. with EN 1092-1

ACCEPTANCE TESTING
» Seat leak tightness: EN 12266-1 P12; leakage rate A
» Tightness to atmosphere: EN 12266-1 P11
» Strength: EN 12266-1 P10

AUTOMATION
Flange connection in accordance with ISO 5211, allows for direct mounting of an actuator or by means of brackets. Pneumatic and electrical actuators utilizable.

TEMPERATURE
-45°C to +200°C depending on O-ring material (see pT diagram)

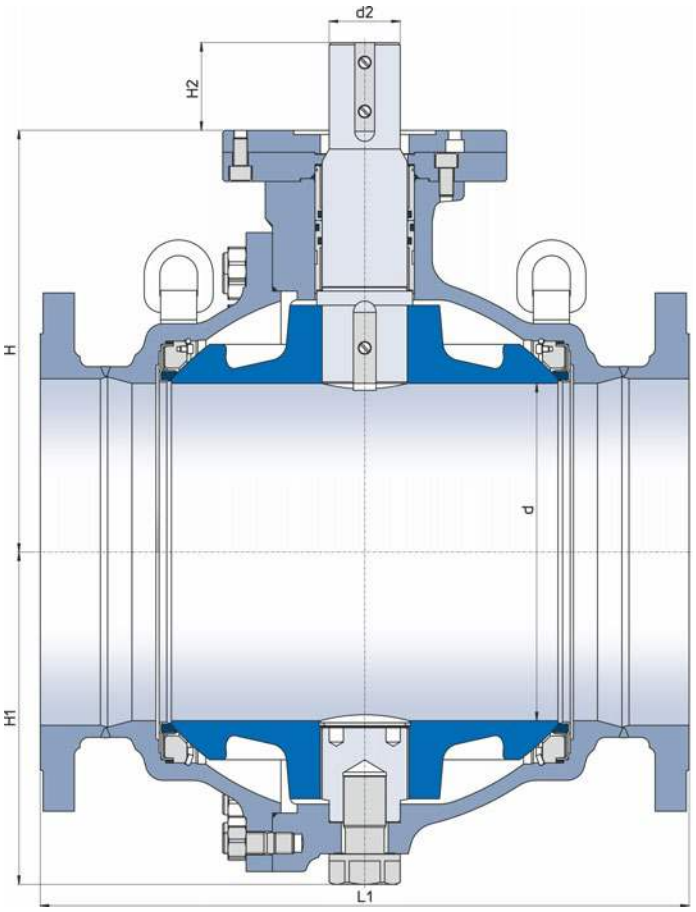

KHI VARIANTS

FULL BORE DN 500–1000 | Material: Carbon steel 1.0619										
DN	Dimensions				Connection dimensions		Top Flange	PN		Weight in kg	
	L1	H	H1	H2	d	d2	ISO 5211			at PN 25	at PN 40
500	914	594	468	124	475	100	F25/30	25	40	1200	1330
600	1067	698	533	125	585	100	F25/30	25	40	1750	1863
700	1245	834	640	149	686	140	F35	25	*	3100	*
800	1372	931	710	148	782	140	F35	25	*	4850	*
1000	2305	1091	865	180	980	180	F35/40/48	25	*	8160	*

* on demand

Dimensions in mm. Subject to modification of design and dimensions.

BALLOSTAR®
KHI

Flanged ends, carbon steel, DN 500–1000

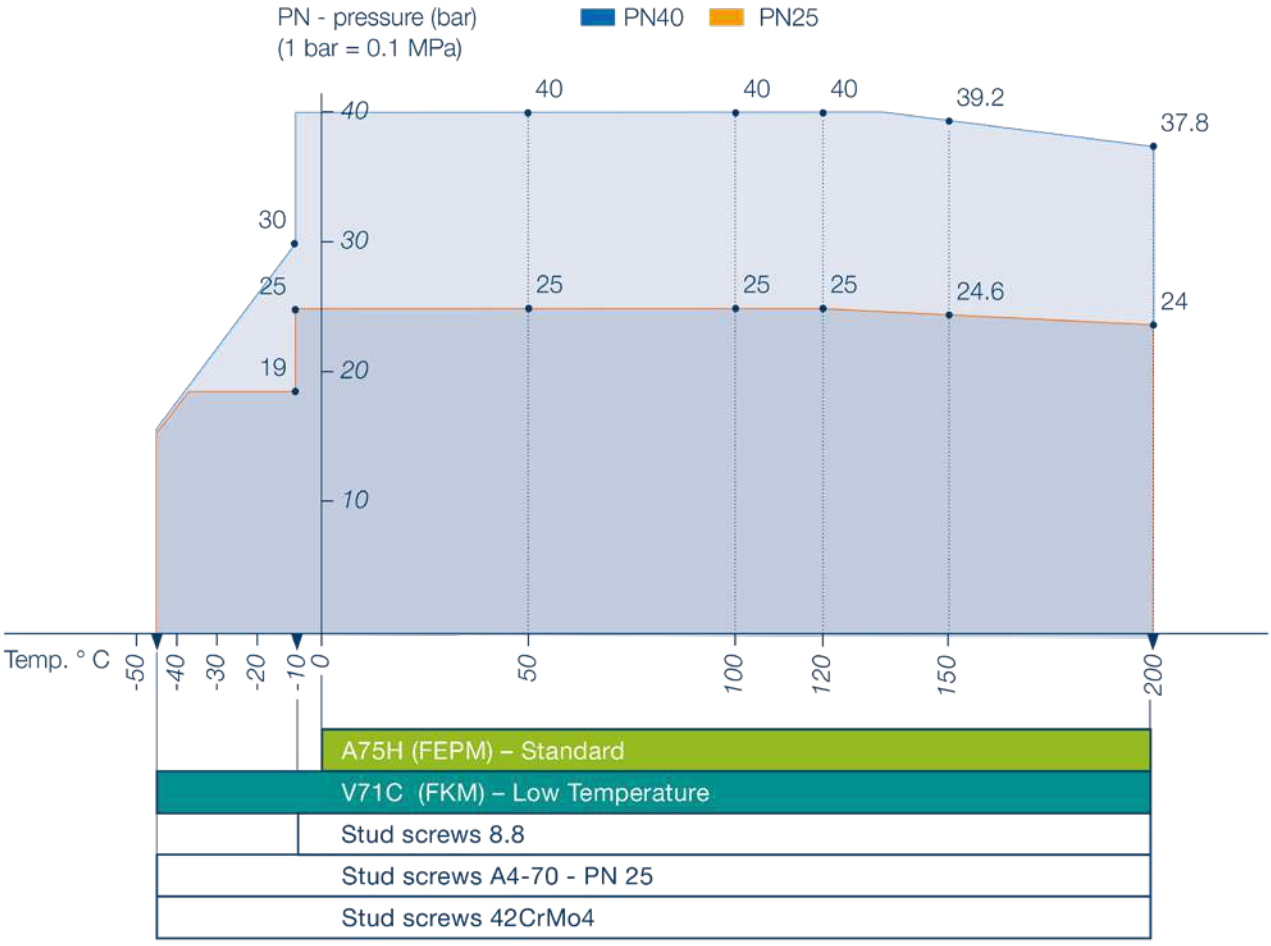

BALLOSTAR®
KHI-S

Welding ends, DN 150–400

GENERAL FEATURES
- Two-piece ball valve with full bore
- Trunnion mounted
- Bi-directional sealing
- Top flange acc. ISO 5211
- Leakage rate A (EN 12266-1/ISO 5208) soft seated
- Leakage rate Class IV-S1 (EN 60534-4) metal seated
- Double Block & Bleed with optional drain valve
- Anti blow out stem
- Anti static tested
- Maintenance-free O-ring system

CONNECTIONS
Welding ends in acc. with customer requirements

ACCEPTANCE TESTING
- Seat leak tightness: EN 12266-1 P12; leakage rate A
- Tightness to atmosphere: EN 12266-1 P11
- Strength: EN 12266-1 P10

AUTOMATION
Flange connection in accordance with ISO 5211, allows for direct mounting of an actuator or by means of brackets. Pneumatic and electrical actuators utilizable.

TEMPERATURE
-45°C to +250°C depending on O-ring material (see pT diagram)

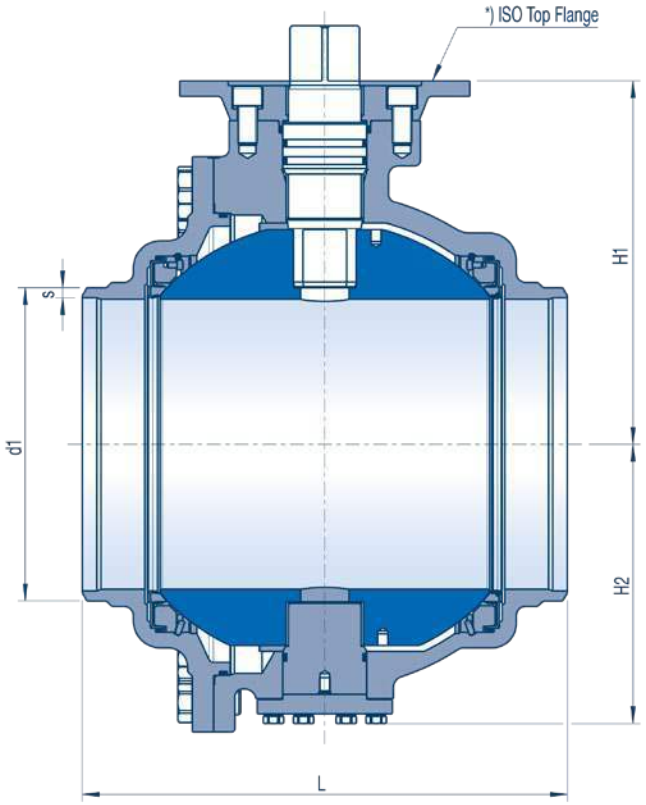

KHI-S VARIANTS

FULL BORE DN 150–400 | Material: Carbon steel 1.0619

DN (ASME)	DN (mm)	Dimensions				Connection dimensions		Top Flange	Weight in kg	Shaft		
		L (mm)*	O	H1	H2	d1 (mm)	s (max. mm)	ISO 5211 not double drilled		Square	Diameter	Key
6"	150	403	326	232	167	168.3	7.15	F14/F16	90	36 (Standard)	48	14
8"	200	419	404	273	209	219.1	8.05	F14/F16	155	36 (Standard)	48	14
10"	250	457	500	349	261	273	10	F16/F25	270	46 (Standard)	60	18
12"	300	502	595	376	289	323.9	10.45	F25/F30	444	55	72	20 (Standard)
14"	350	572	670	440	346	355.6	11.05	F25/F30	632	55	72	20 (Standard)
16"	400	610	720	442	359	406.4	12.7	F25/F30	800	55	72	20 (Standard)

* acc. to EN 12982 row 61 / ANSI B16.10 short pattern

Dimensions in mm. Subject to modification of design and dimensions.

BALLOSTAR® KHI-S

Welding ends, DN 150–400

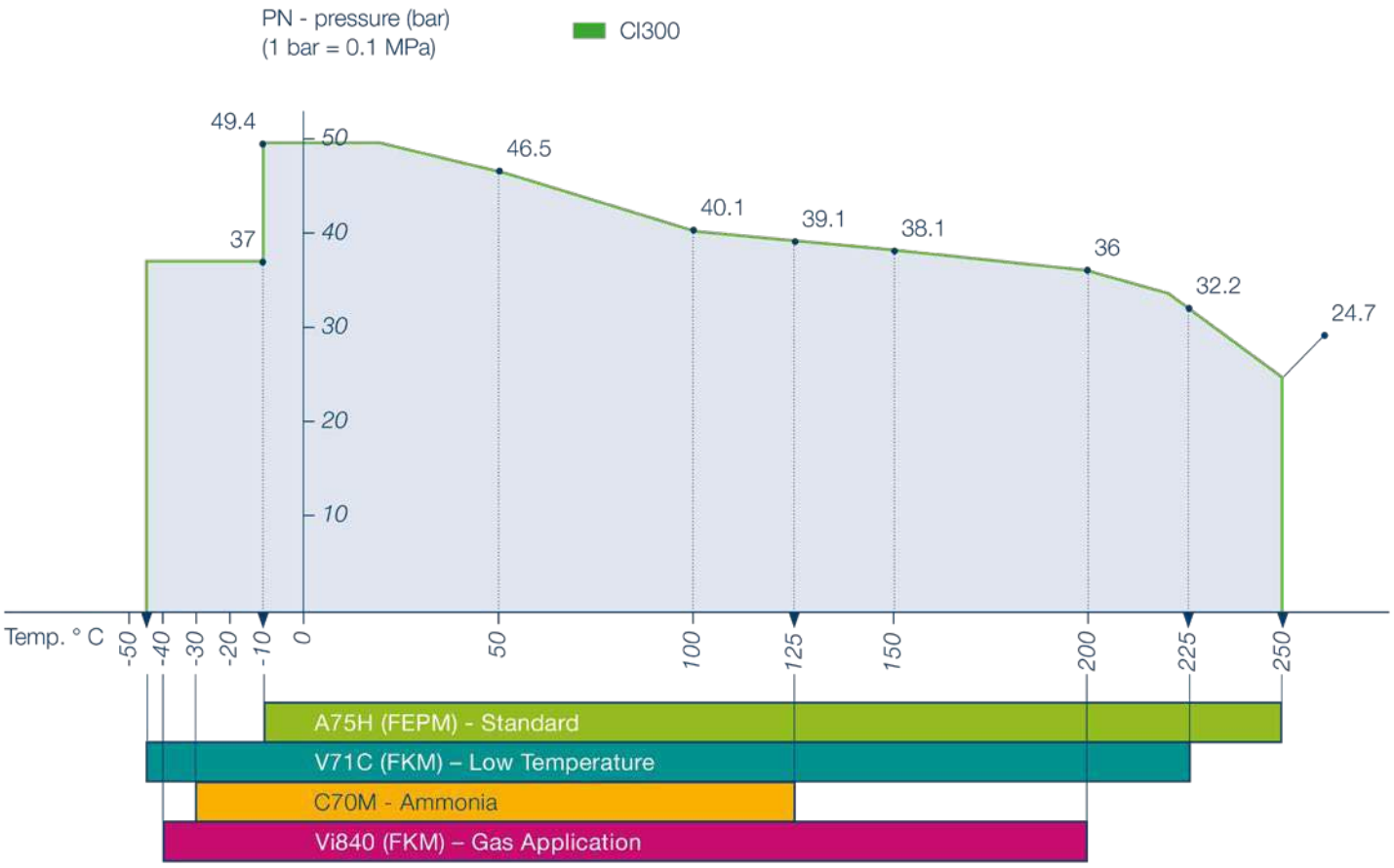

BALLOSTAR® KHSVI

Welding ends, DN 500–1000

GENERAL FEATURES
» Two-piece ball valve with full bore
» Trunnion mounted
» Bi-directional sealing
» Top flange acc. ISO 5211
» Leakage rate A (EN 12266-1/ISO 5208) soft seated
» Double Block & Bleed with optional drain valve
» Anti blow out stem
» Anti static tested
» Maintenance-free O-ring system

CONNECTIONS
Welding ends in acc. with customer requirements

ACCEPTANCE TESTING
» Seat leak tightness: EN 12266-1 P12; leakage rate A
» Tightness to atmosphere: EN 12266-1 P11
» Strength: EN 12266-1 P10

AUTOMATION
Flange connection in accordance with ISO 5211, allows for direct mounting of an actuator or by means of brackets. Pneumatic and electrical actuators utilizable.

TEMPERATURE
-45°C to +200°C depending on O-ring material (see pT diagram)

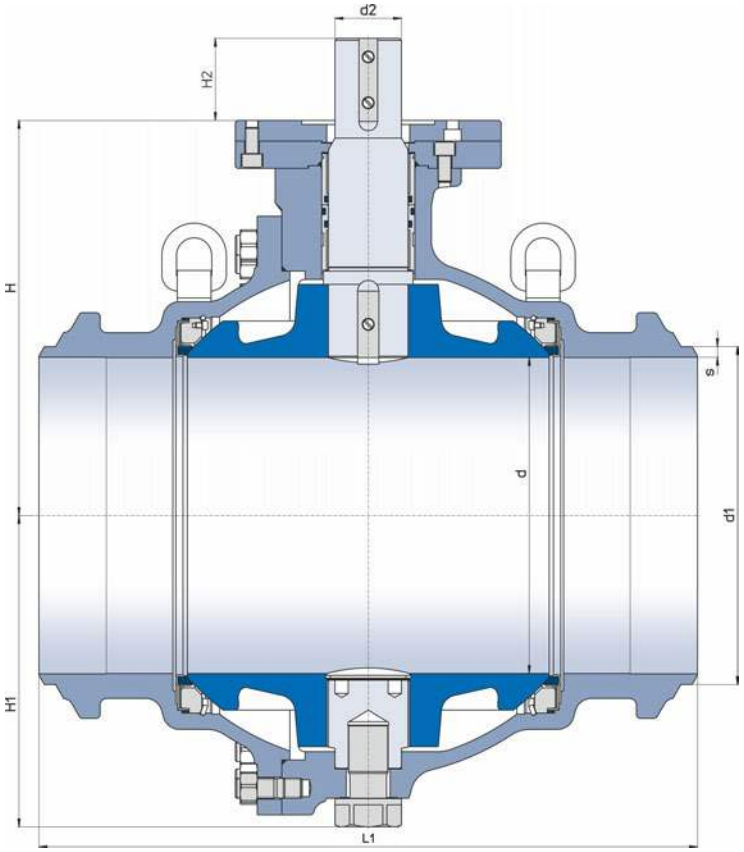

KHSVI VARIANTS

FULL BORE DN 500–1000 | Material: Carbon steel 1.0619

DN	Dimensions				Connection dimensions				Top Flange	PN		Weight in kg
	L1	H	H1	H2	d	d1	d2	s*	ISO 5211			
500	991	594	468	124	475	508	100	16	F25/30	25	40	1150
600	1143	698	533	125	585	610	100	17.5	F25/30	25	40	1700
700	1346	834	640	149	686	711	140	17.5	F35	25	40	3000
800	1524	931	710	148	782	813	140	19	F35	25	40	4700
1000	1981	1091	865	180	980	1016	180	10	F35/40/48	25	40	7480

* Standard dimensions, also configurable in accordance with customer requirements

Dimensions in mm. Subject to modification of design and dimensions.

BALLOSTAR® KHSVI

Welding ends with reducing cones

GENERAL FEATURES
» Two-piece ball valve with full bore
» Trunnion mounted
» Bi-directional sealing
» Top flange acc. ISO 5211
» Leakage rate A (EN 12266-1/ISO 5208) soft seated
» Double Block & Bleed with optional drain valve
» Anti blow out stem
» Anti static tested
» Maintenance-free O-ring system

CONNECTIONS
Welding ends in acc. with customer requirements

ACCEPTANCE TESTING
» Seat leak tightness: EN 12266-1 P12; leakage rate A
» Tightness to atmosphere: EN 12266-1 P11
» Strength: EN 12266-1 P10

AUTOMATION
Flange connection in accordance with ISO 5211, allows for direct mounting of an actuator or by means of brackets. Pneumatic and electrical actuators utilizable.

TEMPERATURE
-45°C to +200°C depending on O-ring material (see pT diagram)

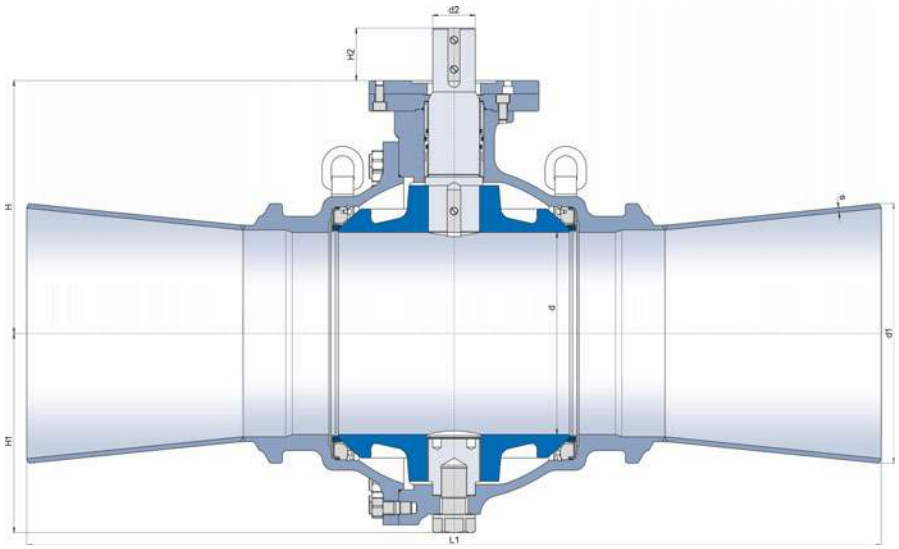

KHSVI CONES VARIANTS

REDUCING CONES DN 600/500 – 1200/1000 | Material: Carbon steel 1.0619

DN	Dimensions				Connection dimensions				Top Flange	PN		Weight in kg
	L1*	H	H1	H2	d	d1	d2	s*	ISO 5211			
600/500	2011	594	468	124	475	610	100	7	F25/30	25	40	1264
700/600	2367	698	533	125	585	711	100	8	F25/30	25	40	1860
800/700	2570	834	640	149	686	813	140	8	F35	25	40	3184
900/800	2748	931	710	148	782	914	140	10	F35	25	40	4960
1000/800	2748	931	710	148	782	1016	140	10	F35	25	40	4980
1200/800	2950	931	710	148	782	1220	140	12	F35	25	40	5070
1200/1000	3407	1091	865	180	980	1220	180	12	F35/40/48	25	40	7950

* Standard dimensions, also configurable in accordance with customer requirements

BALLOSTAR® KHSVI

Welding ends, DN 500–1000 with reducing cones

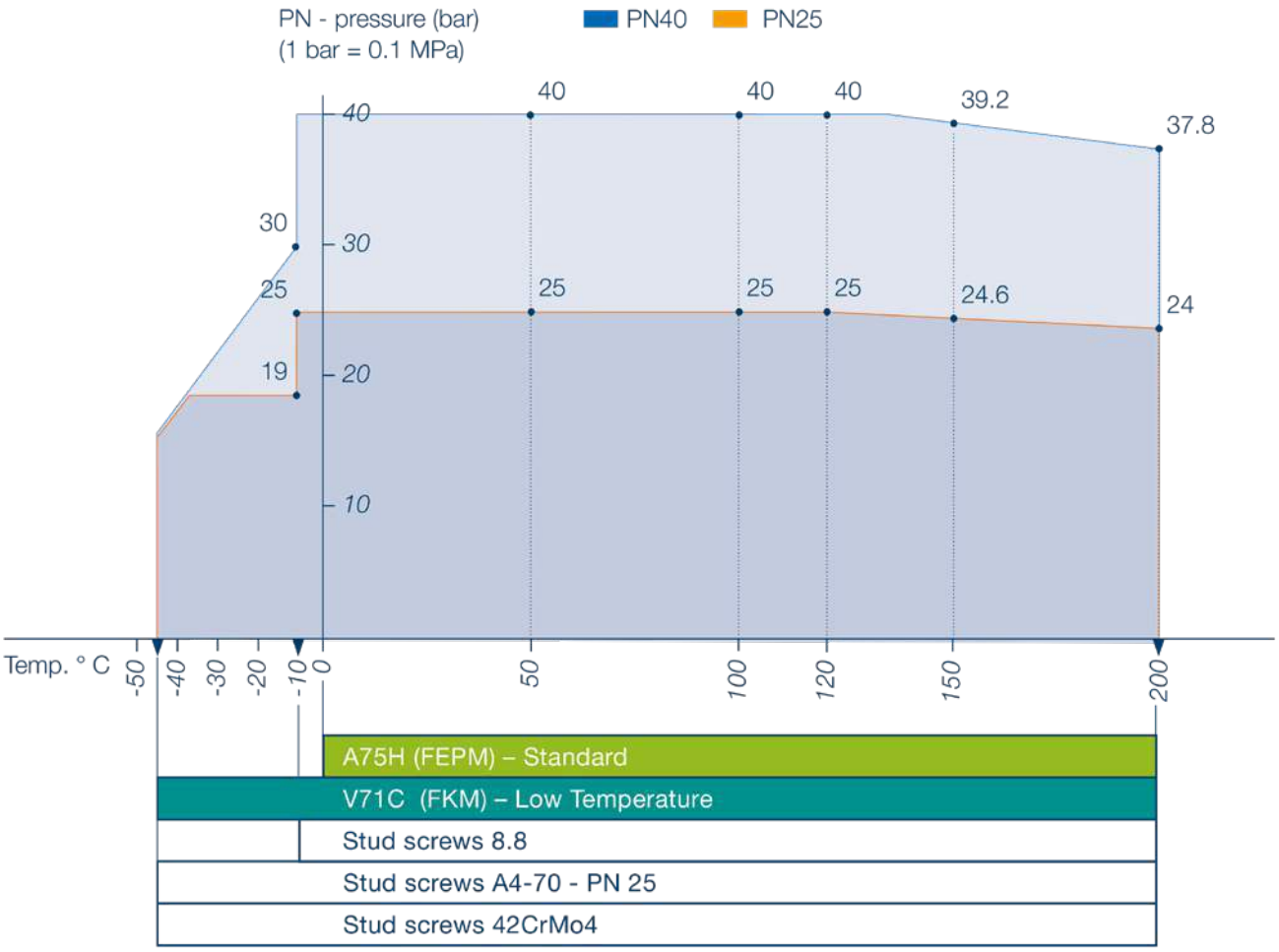

BALLOSTAR®
KHSVI VVS

Fully-welded, DN 150–250

GENERAL FEATURES
» Single-piece ball valve with full bore
» Trunnion mounted
» Bi-directional sealing
» High degree of resilience against pipework forces
» Double Block & Bleed with optional drain valve
» Anti blow out stem
» Anti static tested
» Maintenance-free
» Certified acc. to EHP 003 (EN 488-1)

CONNECTIONS
Welding ends in acc. with customer requirements

ACCEPTANCE TESTING
» Seat leak tightness: EN 12266-1 P12; leakage rate A
» Tightness to atmosphere: EN 12266-1 P11
» Strength: EN 12266-1 P10

AUTOMATION
Flange connection in accordance with ISO 5211, allows for direct mounting of an actuator or by means of brackets. Pneumatic and electrical actuators utilizable.

TEMPERATURE
-45°C to +250°C depending on O-ring material (see pT diagram)

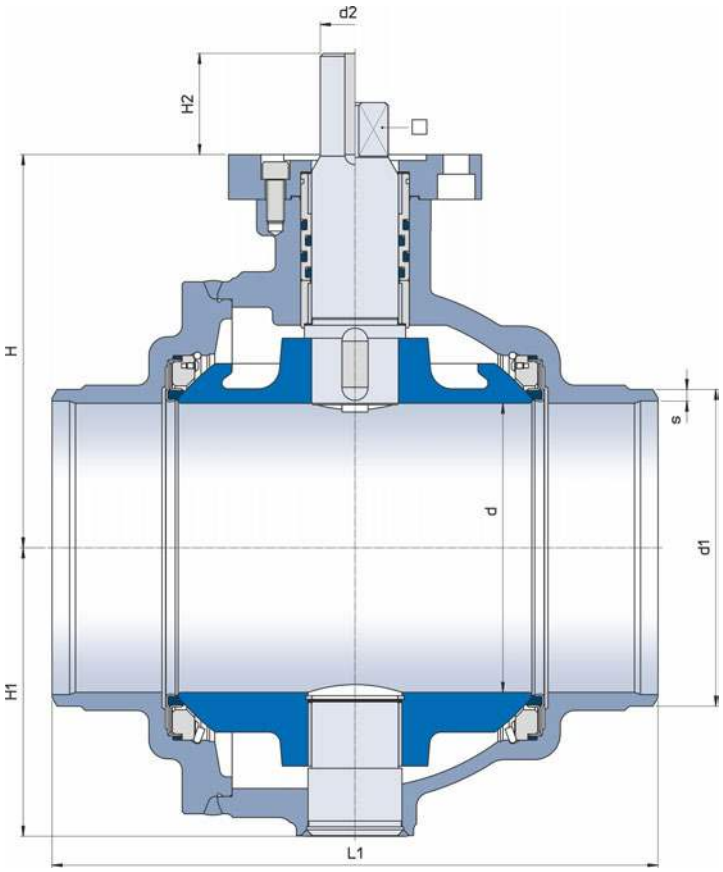

KHSVI VVS VARIANTS

FULL BORE DN 150–250 | Material: Carbon steel 1.0619

DN	Dimensions				Connection dimensions					Top Flange	PN		Weight in kg
	L1	H	H1	H2	d	d1	d2	□ SW	s*	ISO 5211			
150	403	383	149	77	150	168.3	36	27/36	6.65	F12/14	25	40	55
200	419	474	200	98	200	219.1	48	36	8.05	F12/14/16	25	40	106
250	457	493	250	95	250	273	50/60	46/55	8.50	F16/25	25	40	170

* Standard dimensions, also configurable in accordance with customer requirements

DN 150: connection flange F12 or F14 optional with ø 36 mm, □ 27 or □ 36
DN 200: connection flange F14 or F16 optionall with ø 48 mm or □ 36
DN 250: connection flange F16 or F25 optional with ø 50 mm or ø 60 mm, □ 46 or □ 55

Dimensions in mm. Subject to modification of design and dimensions.

BALLOSTAR®
KHSVI VVS

Fully-welded, DN 300–800

GENERAL FEATURES
» Single-piece ball valve with full bore
» Trunnion mounted
» Bi-directional sealing
» High degree of resilience against pipework forces
» Double Block & Bleed with optional drain valve
» Anti blow out stem
» Anti static tested
» Maintenance-free
» Certified acc. to EHP 003 (EN 488-1)

CONNECTIONS
Welding ends in acc. with customer requirements

ACCEPTANCE TESTING
» Seat leak tightness: EN 12266-1 P12; leakage rate A
» Tightness to atmosphere: EN 12266-1 P11
» Strength: EN 12266-1 P10

AUTOMATION
Flange connection in accordance with ISO 5211, allows for direct mounting of an actuator or by means of brackets. Pneumatic and electrical actuators utilizable.

TEMPERATURE
-45°C to +250°C depending on O-ring material (see pT diagram)

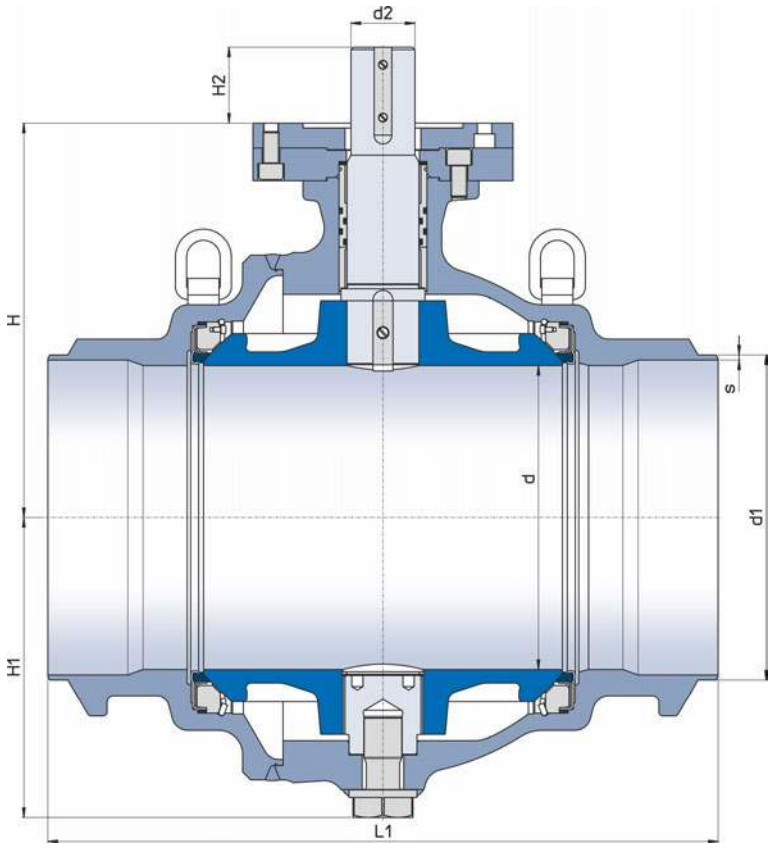

KHSVI VVS VARIANTS

FULL BORE DN 300–800 | Material: Carbon steel 1.0619

DN	Dimensions				Connection dimensions				Top Flange	PN		Weight in kg
	L1	H	H1	H2	d	d1	d2	s*	ISO 5211			
300	635	383	294	77	300	323.9	60	9.45	F16/25	25	40	288
350	762	474	356	98	350	355.6	80	10.8	F25	25	40	465
400	838	493	376	95	380	406.4	80	10.2	F25	25	40	605
500	991	594	468	124	475	508	100	16	F25/30	25	40	1015
600	1143	698	533	125	585	610	100	17.5	F25/30	25	40	1650
700	1346	834	640	149	686	711	140	17.5	F35	25	40	2690
800	1524	931	710	148	782	813	140	19	F35	25	40	3810

* Standard dimensions, also configurable in accordance with customer requirements

Dimensions in mm. Subject to modification of design and dimensions.

BALLOSTAR®
KHSVI VVS

Fully-welded, DN 150–250 and 300–800

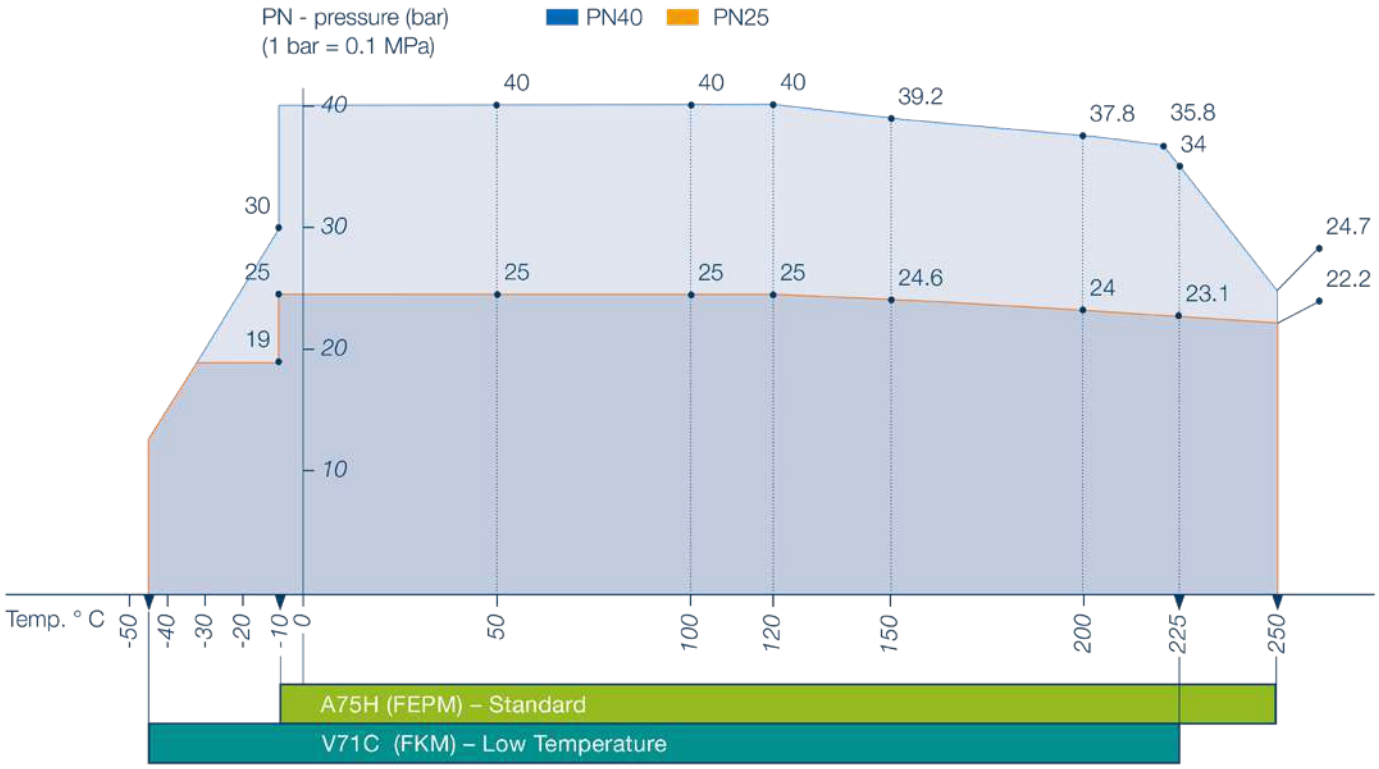

DRAIN VALVE

For the entire Ballostar® portfolio

Test & Drain valve

Test and drain valves are available for all KHI, KHSVI, KHS-VI-VVS, KHI-F and KHI-S ball valve models. These are weld-ed onto the ball valve body in a 45° position as standard. The three-piece KHA ball valve model with short weld ends is used for this purpose (see image).

The process connection can be designed as either a short or long welded end, a flanged end or a threaded connection. The position of the test or drain cock on the ball valve body is also variable.

The following advantages result from the use of a test or drain cock:

1. Draining of the ball valve cavity in closed position
2. Checking the tightness of the inlet-side sealing element in the closed position (Double Block & Bleed)
3. Ensuring tightness in the closed state whilst the test or drain valve is open

DN	Dimensions	L	α	x	y
150	KHA-S DN 20	287	45°	353	218
200		322		377	243
250	KHA-S DN 25	399		429	289
300		434		453	314
350		464		475	335
400		499		499	360
500	KHA-S DN 50	621		702	514
600		706		762	574
700		786		819	631
800		816		843	655
1000	KHA-S DN 65	1030		984	782

All parameters and dimensions can be individually modified upon request

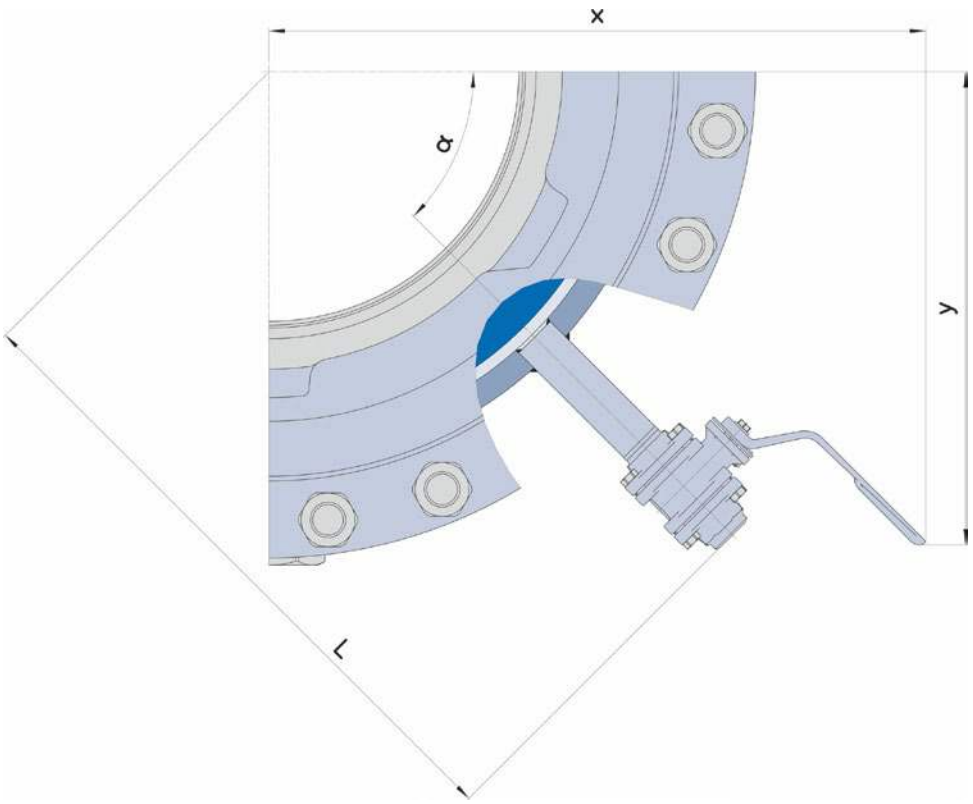

STEM EXTENSIONS

For Ballostar® KHI-F & KHI-S in carbon steel, DN 150–400

Option with extended operating stem

Certain processes and operating conditions require an extension of the ball valve's operating shaft. Such conditions may arise, for example, when mobile insulation is fitted to the valve to minimize heat loss, when the installation situation requires it for reasons of space (e.g. in shaft installations), or when a greater operating height for the ball valve is desired.

To ensure a high degree of flexibility regarding specific structural operating conditions and the operation of the ball valve, the KHI-F and KHI-S ball valve models are available with bolted-on operating stem extensions at a standard height of 300 mm.

The stainless-steel operating shaft is housed within a protective carbon steel sleeve. The end of the extension is designed as an ISO-TOP flange, which facilitates the installation of a gearbox or actuator.



TECHNICAL DETAILS

Flow characteristics for the determination of the nominal diameter for the entire Ballostar® KHI portfolio

Torques*

KFC SEAT RING

DN (mm)	Differential pressure (bar)	
	25	40/50
	Torque (Nm)*	
150	465	900
200	763	1,255
250	1,488	2,075
300	2,650	4,095
350	3,620	5,045
400	4,465	5,705
500	6,215	8,325
600	9,300	11,100
700	13,800	19,650
800	22,425	26,400
1000	32,100	42,800

METAL SEAT

DN (mm)	Differential pressure (bar)		
	16	25	40
	Torque (Nm)*		
150	630	840	1,090
200	980	1,260	1,640
250	1,890	2,520	3,280
300	3,570	4,480	5,820
350	4,970	6,160	8,000
400	6,090	7,280	9,470
500	7,620	10,045	13,060

*Values without safety.
KLINGER recommends safety factor 1.4.

Flow values

FULL BORE

DN (mm)	ζ	K_{vs}-value
150	0.042	3,840
200	0.037	7,280
250	0.039	11,120
300	0.036	16,700
350	0.042	20,900
400	0.043	27,100
500	0.041	43,300
600	0.037	65,600
700	0.047	79,100
800	0.043	107,800
1000	0.044	166,600

REDUCING CONES

DN (mm)	ζ	K_{vs}-value
500/400	0.060	39,837
600/500	0.055	60,565
700/600	0.052	84,698
800/700	0.048	115,932
900/800	0.045	150,652
1000/800	0.224	83,886
1200/1000	0.127	161,700

MAST values for KHI-F & KHI-S

(NOMINAL DIAMETERS DN 150 – 400, 20° C, Nm)

DN (mm)	M2 (Xc)	M3 (Xd)
150	2,134	4,268
200	2,754	5,508
250	5,095	10,190
300	10,672	21,344
350	13,729	27,458
400	14,596	29,193

TECHNISCHE DETAILS

Auslegungsberechnungen

Flow rate	Q	in m³/h
Pressure loss	Δp	in bar
Density	ρ	in kg/m³
Velocity	w	in m/s
Flow coefficient	K_v	in m³/h
Pressure loss coefficient	ζ	

The valve is to be selected in a manner that the K_v-value is greater, or the ζ-value less than the computed value.

Allows for the calculation of:

$$K_v = Q * \sqrt{\frac{\rho}{1000 * \Delta p}}$$

or

$$\zeta = \frac{2 * \Delta p * 10^5}{\rho * w^2}$$

In metric measurement systems the characteristic unit utilized for shut-off andcontrol valves is the K_V-value. The values provided in the table apply to a H_2O flow medium with a temperature of 5–30°C, a density of 1000 kg/m³ and a pressure loss of p = 1 bar at the valve.

In countries using inches, the characteristic unit is the C_V-value. It provides how many US gal/min of H_2O, at a temperature of 60°F and with a pressure loss of 1 psi, flow through the valve.

$$\Delta p = \zeta * \frac{\rho}{2} * w^2 * 10^{-5}$$

or

$$\Delta p = \left(\frac{Q}{K_v}\right)^2 * \frac{\rho}{1000}$$

HIGHEST REQUIREMENTS

Certification in accordance with EHP 003 (EN 488-1) for the fully-welded model KHSVI VVS

In order to increase operational safety, the requirements regarding buried shut-off valves are constantly increased. Meeting these requirements is achieved through the utilization of special valves with particularly rigid and deformation-free bodies. The corresponding technical requirements and test methods for shut-off valves directly buried within district heating networks are defined in the EHP 003 (EN 488-1).

Increased compressive forces as well as new bending moments for valves were already defined in the 2011 predecessorversion of the standard. The tensile forces, however, remained unchanged.

Compared to 2011, some requirements have now again been made stricter. The number of operations during the type approval test, for example, has been increased and all tests must be carried out on the same valve. Furthermore, the end of the last 100 mm of the spindle/shaft construction must feature corrosion protection.

KLINGER Ballostar® KHSVI VVS ball valves are successfully tested and certified by the TÜV Austria on the company-own multi-function test stand under inclusion of the expanded requirements of EHP 003 (EN 488-1).



In-house test laboratory

DEMANDING REQUIREMENTS ARE OUR STANDARD

We not only offer standard products, but also master individual requirements. This means we act as problem solvers even for the most challenging applications. Our products are tested for quality, safety and reliability in our in-house test laboratory.

HIGHEST QUALITY IS OUR MISSION

Therefore, design and production always remain our responsibility. International applications for our products made in Austria.

FOCUS INDUSTRIES

Your challenges – our competences



DISTRICT HEATING

Excellent thermal resistance, long service life and high performance efficiency are reflected in all our products and solutions for district heating applications.



PULP & PAPER

Our valves stand for optimized processes and increased production efficiency. We make a significant contribution to reducing downtime, saving energy and avoiding emissions.



GEOTHERMAL

Especially for the geothermal sector, KLINGER offers innovative valve solutions for the ecological and economical extraction and use of “green” energy.



STEEL

KLINGER offers unique solutions to complex issues facing the metalworking industry today, such as high pressure and high temperature environments.



HYDROGEN

The use of hydrogen plays an essential role in achieving climate goals. KLINGER masters even complex challenges in this segment with efficient solutions.

Our products are problem solver for many areas of applications.

KLINGER Fluid Control

Your KLINGER distribution partner

KLINGER w Polsce Sp. z o.o.
ul. Farbiarska 69, 02-862 Warszawa
tel.: +48 22 644 01 05
biuro@klinger.pl

KLINGER w Polsce – filia Wrocław
(dawniej: ARA Pneumatik)
ul. Graniczna 186A
54-530 Wrocław
tel. +48 601 941 861

www.klinger.pl

Edition 2026 | Typing and printing errors reserved

KLINGER Fluid Control GmbH
Am Kanal 8-10 2352 Gumpoldskirchen Austria
Tel: +43 2252 600-0 Fax: +43 2252 600-100
office@klinger.kfc.at

www.klinger.kfc.at