KLINGER Fluid Control

KLINGER MONOBALL KHO

Fully welded ball valve
DN 15-250

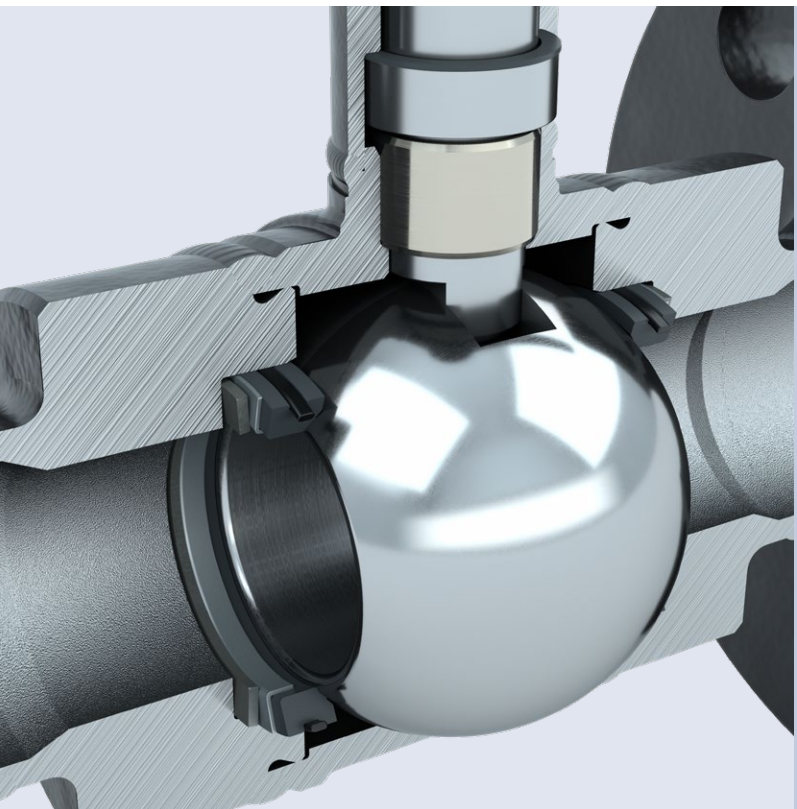



www.klinger.kfc.at


GUMPOLDSKIRCHEN
AUSTRIA

KLINGER FLUID CONTROL

Today for tomorrow

As a subsidiary of the KLINGER Group, KLINGER Fluid Control has been developing, manufacturing and maintaining high-quality industrial valves at the business location Gumpoldskirchen/Austria for more than 135 years. Via the global distribution and service network, KLINGER Fluid Control offers both standardized and tailored products and services as well as solutions for customers around the globe.

Products from KLINGER Fluid Control are characterized by their high level of reliability as well as by an above average lifecycle at a simultaneously very low total cost of ownership (TCO). As a trusted solutions partner, KLINGER Fluid Control creates customer benefits with added value with the focus on the following core competences:







ENCOMPASSIVE SERVICE

» Application expertise
» Product trainings
» Fast quotation and order processing
» Customer-specific special solutions
» Supply of spare parts
» Valve maintenance
» On-site technical support

INNOVATIVE SOLUTIONS

» State of the art development tools
» Product development for different areas of application
» Automation solutions
» Product tests in the company-own technical center
» A wide range of certificates and approvals

OPERATIONAL EXCELLENCE

» Flexible production
» Transparency in the supply chain
» ISO 9001 certified quality
» ISO 14001 as well as EMAS certified environmental management system

MONOBALL KHO

Decades of Reliability

PRODUCT ADVANTAGES

- Maintenance-free
- Multi-layer, durable operating stem seal
- Certified according to EN 488:2019 and EHP 003
- Meets the requirements of the AGFW worksheet FW 401 – Part 5
- Blowout-proof operating stem
- Elastically pre-stressed sealing elements with stainless steel belleville washer
- Long heat-insulating shaft
- Operating Shaft made of stainless steel
- High degree of resilience against pipework forces
- Supports pressurization on both sides

SPECIAL TYPES

- Prepared design for thermal insulated pipe systems
- Drain and vent valve made of stainless steel for the plastic casing pipe systems
- Top flange in accordance with EN ISO 5211 for automation
- Full solution with venting and draining, insulation and leak warning wires

PRODUCT DETAILS

PN	16 - 40
DN	15 - 250
Material	Cast steel, stainless steel
Temperature	-5 °C to +200 °C
Design	Welding ends, flanges, threaded stud, full and reduced bore
Type	Fully welded ball valve



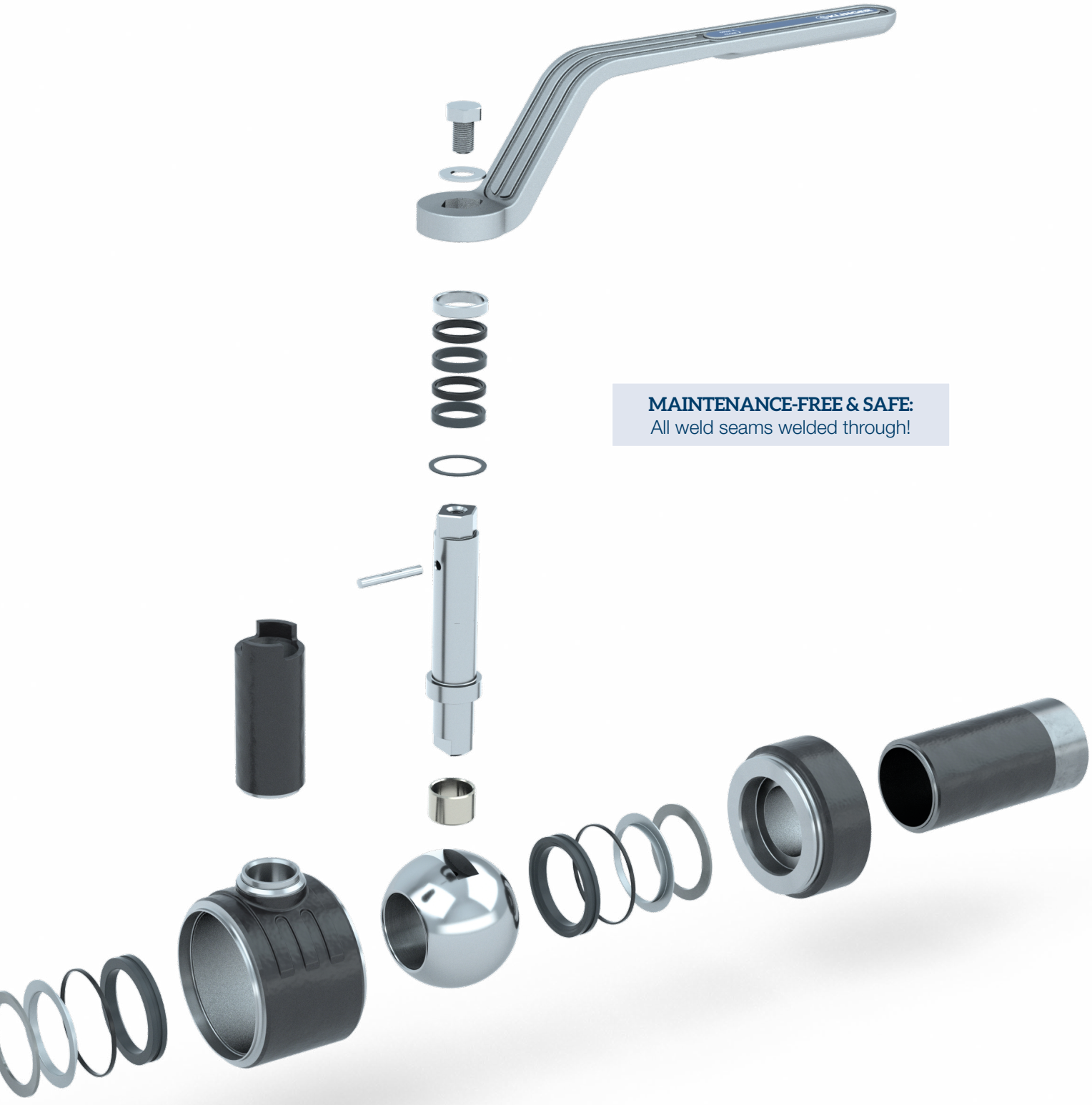

MAINTENANCE-FREE & SAFE:
All weld seams welded through!

ONE-PIECE FUNCTIONALITY

The MONOBALL KHO in detail

The Monoball valve series has been successfully used in the field of district energy and industrial technology for more than 30 years. Continuing this success, we have brought the Monoball valve series to the next technological level. Durability, functionality, no maintenance required and user-friendliness were the top priorities during development. The new KLINGER Monoball KHO is a fully welded ball valve that is used in district energy, for heating and cooling technology and for plant engineering.

SEALING SYSTEM

The permanently elastic, maintenance-free sealing system comprises corrosion-resistant, pre-stressed stainless steel belleville washers as well as graphite-reinforced PTFE sealing rings. This ensures reliable, bi-directional tightness. An additional high temperature-resistant O-ring guarantees leak tightness between the sealing ring and the body and negates the entry of media from the cavity (Fig. 1). The pressure of the medium presses the ball against the downstream sealing element. The upstream, triple-chambered sealing ring is pressed against the ball by the pre-stressed belleville washer. The pre-stressed belleville washers ensure an evenly distributed contact pressure on the ball. This configuration leads to a bi-directionally tight valve, which is excellent in the event of temperature and pressure fluctuations.

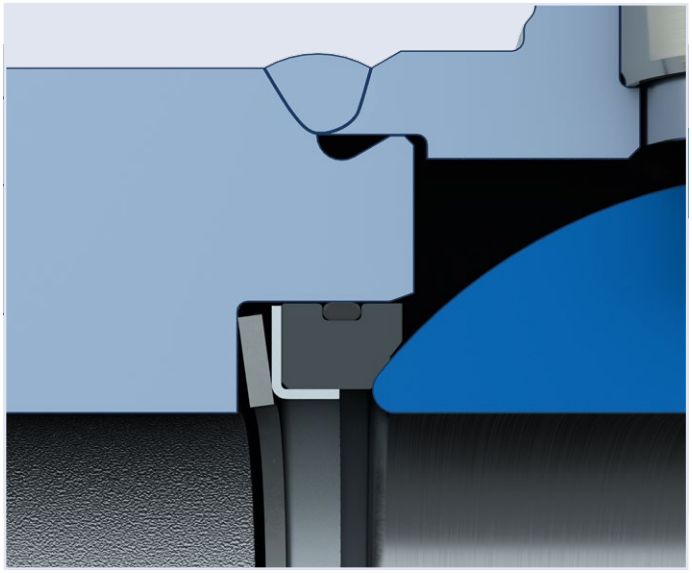

Fig. 1: Details of the sealing system

BALL

In order to ensure a turbulence-free laminar flow, the KLINGER Monoball KHO relies on a stainless steel ball with a cylindrical bore. Plant operators therefore not only benefit from lower pressure losses, less required pump capacity and reduced operating costs, but also contribute to climate protection.

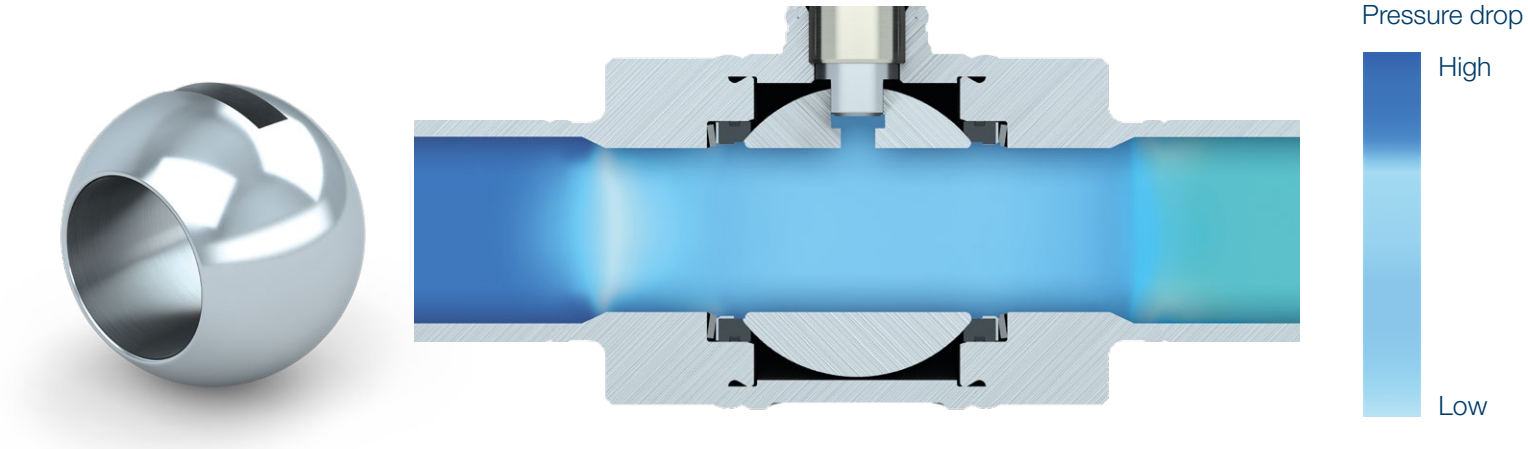

Fig. 2: The Monoball KHO offers low pressure losses

DURABILITY AND RELIABILITY

The MONOBALL KHO in detail

BODY

The stress-optimized ball valve body with a cast-on stem is made from massive carbon- or stainless steel casting and is able to withstand the greatest tensile- and pressure forces. The stress-optimized execution is facilitated by means of welding seams, which are full penetration welded across the cross-section. Furthermore, corrosion-related tension cracks are effectively avoided by means of positioning in low-tension areas. All welding seams on the fully welded body manufactured in a fully automated manner with the aid of state of the art welding technologies. A penetration-welded seam is used for the stem extension at the already cast-on stem: Compared to a standard hollow weld, it facilitates an optimal welding connection.

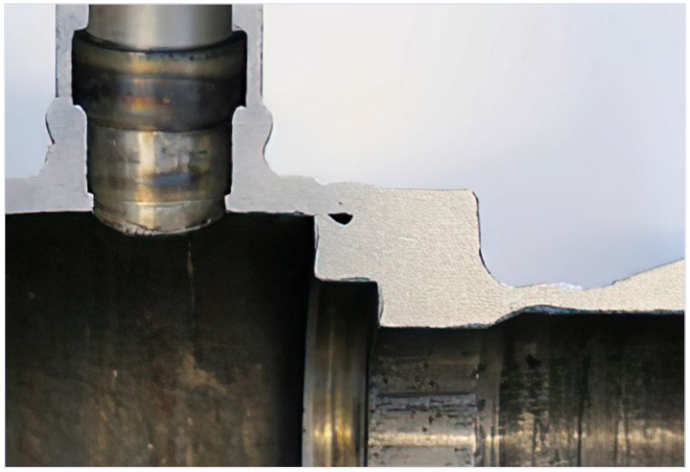

Fig. 3: micrograph of the weld seam

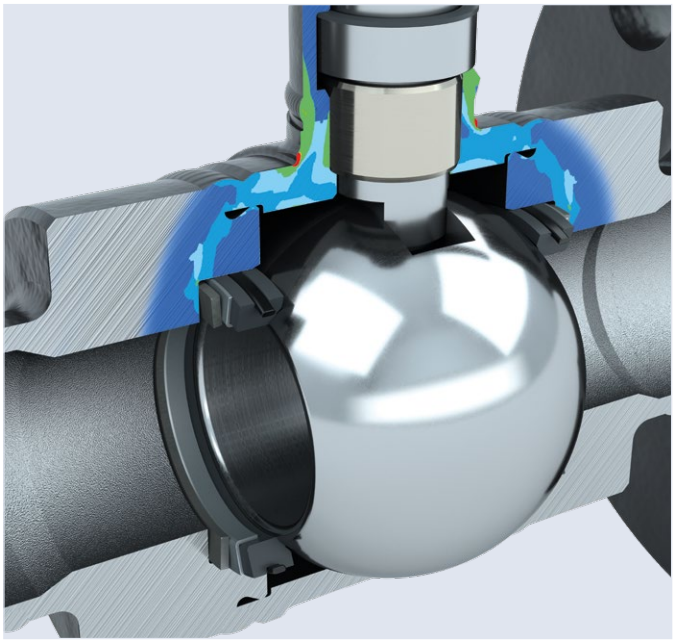

STEM SEALING

The double stem-sealing execution consists of a flat gasket (KFC-25) and two high temperature-resistant, optimally chambered O-rings made of FKM. This results in zero maintenance, lowers operating costs and guarantees reliability.

A bearing bush ensures optimal mounting of the blow-out-proof stainless steel shaft and thus a long service life of the valve. If required, the top O-ring can be removed from the depressurized pipe system without disassembly of the valve.

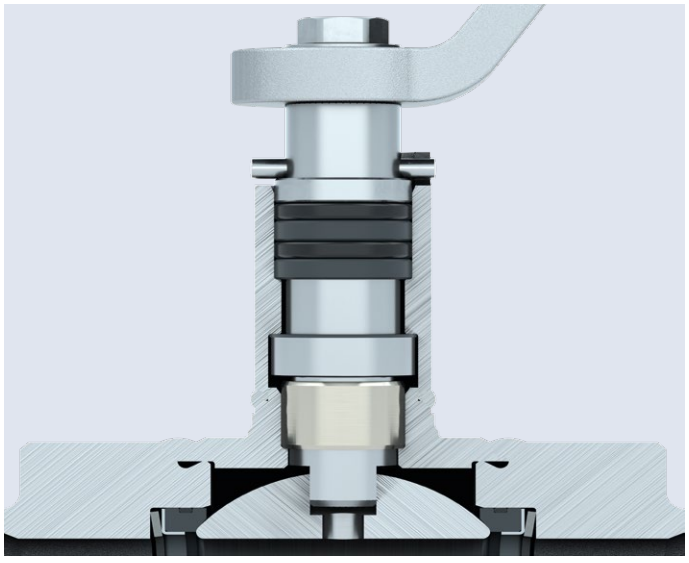

HIGHEST REQUIREMENTS

Certification according to EN 488:2019

The requirements regarding underground shut-off valves have been continuously increased over the years to increase operational safety. This is realized by means of special ball valves with an especially robust and deformation-free body. The KLINGER Monoball KHO series of ball valves was specially designed for the utilization in pipe systems, which are operated with high external loads. The valve is characterized by its massive cast design as well as a fully welded body optimized to withstand major forces. As a consequence, neither cold-formed sheet metal parts, nor pipe segments are used. Furthermore, welding seams are not located at positions critical in terms of force progression. Instead, an optimized positioning of the body welding seams negates the generation of contact corrosion. These measures result in a highly rigid valve body and ensure that no external loads exert an influence on the sealing system. The KLINGER Monoball KHO meets the requirements of the EN 488:2019 standard and those of the AGFW worksheet FW 401. EN 488 defines the technical requirements as well as the test procedure for these shut-off valves, which are located underground in district heating networks. The predecessor version of the standard from the year 2011 already defined increased pressure forces as well as new side loads for valves. Compared to previous versions, several requirements have again been tightened in the current version. The number of operations, for example, has been increased for the type-testing process, all tests must be carried out on the same valve and the last 100 mm of the spindle / stem construction must be executed in a corrosion-protected manner. KLINGER Monoball KHO ball valves have been successfully tested on the company-own multi-function test bench under inclusion of the extended requirements of EN 488:2019.



In-house test laboratory

LIFE CYCLE COSTS (LCC)

Cost efficiency and reliability at its best

The real cost of a valve is not just the purchase price, but includes the expenses incurred during the entire life of the valve. The costs due to pressure drops, failures, blockages and leaks, which eventually lead to production shutdowns, are often significantly higher than the original purchasing price of the valve. Do not determine the purchase price of a valve without considering all relevant costs along the product life cycle.
KLINGER Fluid Control ball valves guarantee a perfect combination between technical performance and economic advantage. Initial costs, service-related costs, explicit and hidden costs that are incurred during the entire operating life of the valve must be considered. This is how plant owners should assess the long-term value of a valve. The life cycle phases are defined by the following variables.

Life Cycle Cost

- Initial cost (purchase price)
- Installation & commissioning cost (pipe welding, crane, hoists etc.)
- Operation costs (pressure losses)
- Maintenance and repair costs
- Down time costs (loss of production)
- Decommissioning / disposal costs

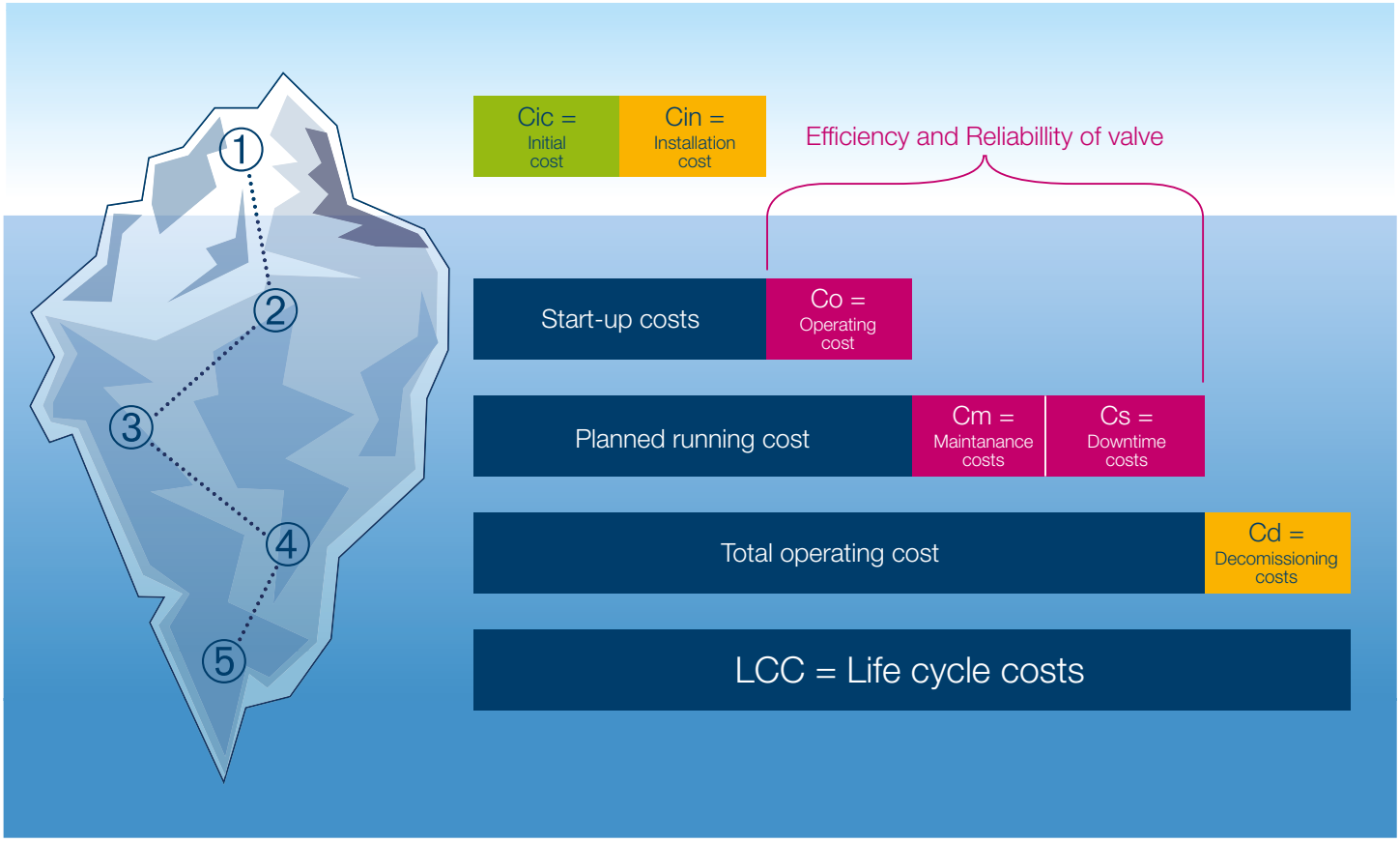

① **Cic** = Initial cost + **Cin** = Installation costs

② Start-up costs + **Co** (Operating costs (Co) are costs associated with keeping the plant running (more specifically energy costs associated with pressure loss).

③ Planned running costs + **Cm** + **Cs**
Cm = Maintenance costs for KLINGER Fluid Control ball valves are very low due to the avoidance of the following: Operating and checking the valve on a regular basis. Dismantling the valve to change the sealing element. Installation of the repaired or a new valve in the line

Cs = Downtime costs can be very high. To empty the pipe, repair the valve as well as refill and test the network section can generate 20 to 30 % additional costs on top of the cost for the downtime.

④ Total operating Costs + **Cd** (Decommissioning cost, which is the cost incurred by companies in reversing the modifications made to landscape when a fixed asset is used up).

⑤ Life cycle costs, that incurred during the entire operating life of the valve

MONOBALL KHO

OVERVIEW – STANDARD RANGE

KHO-S
Welding ends



KHO-F
Flange design



KHO-SF
Welding ends/
Flange design



KHO-KK
Welding ends/
Threaded stud with cap



KHO-S ISO TOP
DN 80-125



KHO-F ISO TOP
DN 80-125



KHO-S ISO TOP
DN 150-250



KHO-F ISO TOP
DN 150-250



OVERVIEW - UNDERGROUND SOLUTIONS

KHO-U
DN 25-125

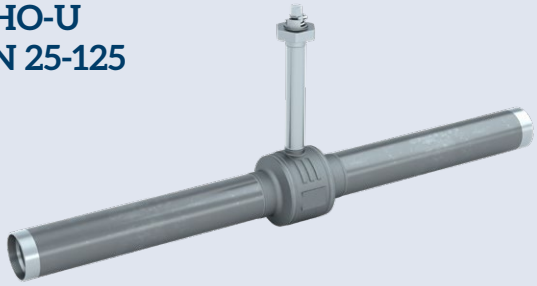

KHO-U
DN 150-250



KHO-SF/SKT
Drain and vent valves



KHO-SM/H
Drain and vent valves



KHO-SZ-M/SKT
Drain and vent valves



KHO-AB
Hot tapping valve



KHO-BH
Branching valve



STEM EXTENSION
small



STEM EXTENSION
medium



STEM EXTENSION
large



MONOBALL KHO-S

Welding Ends

GENERAL FEATURES
» Fully welded ball valve with full and reduced bore
» Floating ball design, hollow ball with guiding tube DN 80 upwards
» High degree of resilience against pipework forces

CONNECTIONS
Welding ends in accordance with AGFW worksheet FW 401 – Part 5

DIMENSIONS
Length according to manufacturer standard

ACCEPTANCE TESTING
» Seat leak tightness: EN 12266-1 P12, leakage rate A
» Tightness to atmosphere: EN 12266-1 P11
» Shell-Strength: EN 12266-1 P10

TEMPERATURE RANGE
-5°C to +200°C

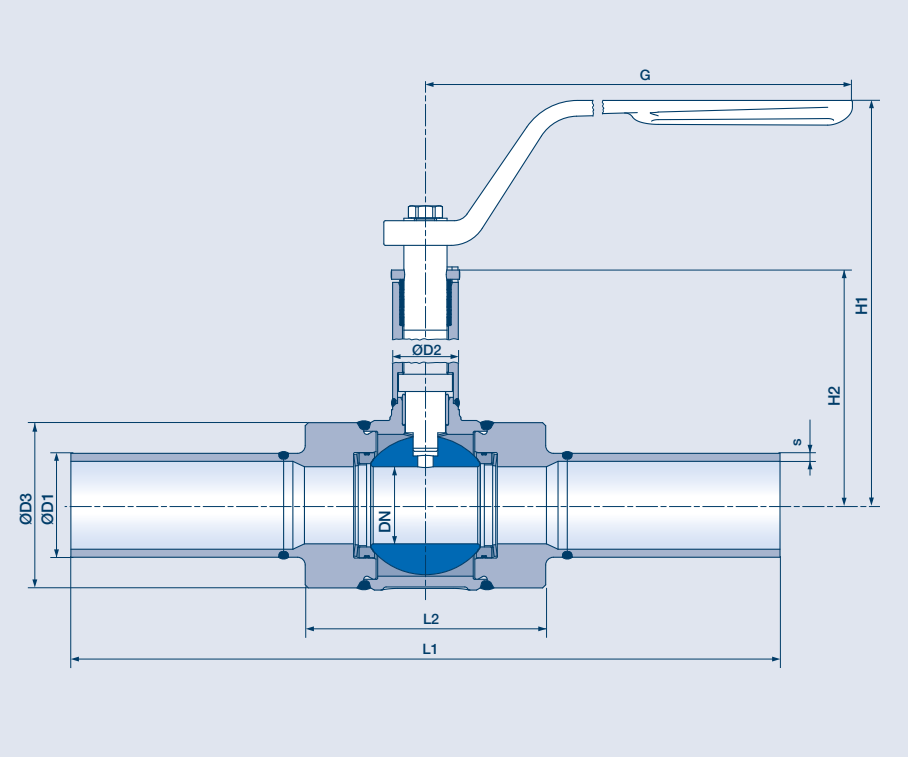

FULL BORE

DN	PN	L1	L2	H1	H2	G	ØD1	s	ØD2	ØD3	weight
15	40	210	55	124	72	130	21.3	2.3	17.2	38	0.8
20	40	230	70	135	81	160	26.9	2.6	21.3	49	1.3
25	40	230	78	139	85	160	33.7	2.6	21.3	55	1.6
32	40	260	94	166	111	160	42.4	3.2	26.9	67	2.8
40	40	260	75	174	119	160	48.3	3.2	26.9	84	3.1
50	40	300	93	198	151	311	60.3	3.2	33.7	101	5.8
65	40	300	115	208	161	311	76.1	3.2	33.7	125	8.9
80	40	310	130	234	183	503	88.9	3.6	48.3	151	12.5
100	40	325	155	250	198	503	114.3	3.6	48.3	185	18
125	40	290	205	266	221	651	139.7	3.6	48.3	231	27

REDUCED BORE

DN	PN	L1	L2	H1	H2	G	ØD1	s	ØD2	ØD3	weight
20R15	40	230	71	124	72	130	26.9	2.6	17.2	38	1
25R20	40	230	78	135	81	160	33.7	2.6	21.3	49	1.5
32R25	40	260	94	139	85	160	42.4	3.2	21.3	55	2.1
40R32	40	260	96	166	111	160	48.3	3.2	26.9	67	3
50R40	40	300	73	174	119	160	60.3	3.2	26.9	84	3.8
65R50	40	300	82	198	151	311	76.1	3.2	33.7	101	6.4
80R65	40	310	115	208	161	311	88.9	3.6	33.7	125	9.6
100R80	40	325	125	234	183	503	114.3	3.6	48.3	151	14.5
125R100	40	290	155	250	198	503	139.7	3.6	48.3	185	20
150R125	40	290	175	266	221	651	168.3	4	48.3	231	29

MONOBALL KHO-F

Flange design

GENERAL FEATURES
» Fully welded ball valve with full and reduced bore
» Floating ball design, hollow ball with guiding tube DN 80 upwards
» High degree of resilience against pipework forces

CONNECTIONS
Flange connection according to EN 1092-1

DIMENSIONS
Length according to EN 558-1, series 1 ≤ DN 100, series 27 ≥ DN 125

ACCEPTANCE TESTING
» Seat leak tightness: EN 12266-1 P12, leakage rate A
» Tightness to atmosphere: EN 12266-1 P11
» Shell-Strength: EN 12266-1 P10

TEMPERATURE RANGE
-5°C to +200°C

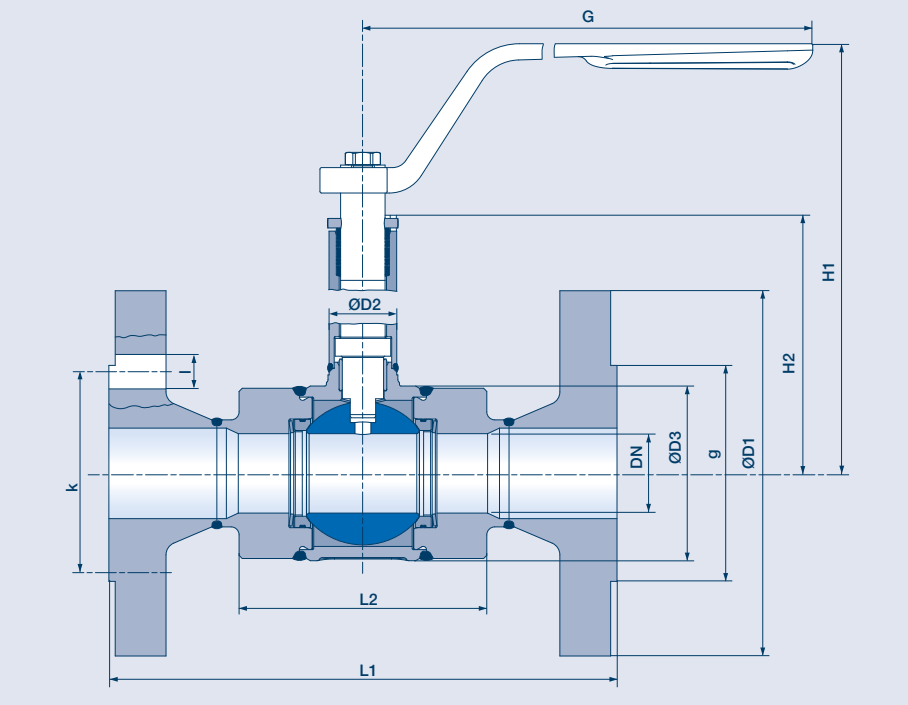

FULL BORE

DN	PN	L1	L2	H1	H2	G	ØD1	g	k	l	n	ØD2	ØD3	weight
15	40	130	55	124	72	130	95	45	65	14	4	17.2	38	2.1
20	40	150	70	135	81	160	105	58	75	14	4	21.3	49	3.2
25	40	160	78	139	85	160	115	68	85	14	4	21.3	55	3.9
32	40	180	94	166	111	160	140	78	100	18	4	26.9	67	6.2
40	40	200	75	174	119	160	150	88	110	18	4	26.9	84	7.2
50	40	230	93	198	151	311	165	102	125	18	4	33.7	101	10.8
65	40	290	115	208	161	311	185	122	145	18	8	33.7	125	15.8
65	16	290	115	208	161	311	185	122	145	18	4	33.7	125	14.7
80	40	310	130	234	183	503	200	138	160	18	8	48.3	151	21
100	40	350	155	250	198	503	235	162	190	22	8	48.3	185	29.5
100	16	350	155	250	198	503	220	158	180	18	8	48.3	185	26.5
125	40	325	205	266	221	651	270	188	200	26	8	48.3	231	42.5
125	16	325	205	266	221	651	250	188	210	18	8	48.3	231	37.5

REDUCED BORE

DN	PN	L1	L2	H1	H2	G	ØD1	g	k	l	n	ØD2	ØD3	weight
20R15	40	150	71	124	72	130	105	58	75	14	4	17.2	38	2.9
25R20	40	160	78	135	81	160	115	68	85	14	4	21.3	49	3.7
32R25	40	180	94	139	85	160	140	78	100	18	4	21.3	55	5.3
40R32	40	200	96	166	111	160	150	88	110	18	4	26.9	67	6.9
50R40	40	230	73	174	119	160	165	102	125	18	4	26.9	84	8.9
65R50	40	290	82	198	151	311	185	122	145	18	8	33.7	101	13.2
65R50	16	290	82	198	151	311	185	122	145	18	4	33.7	101	12.2
80R65	40	310	115	208	161	311	200	138	160	18	8	33.7	125	18.3
100R80	40	350	125	234	183	503	235	162	190	22	8	48.3	151	26
100R80	16	350	125	234	183	503	220	158	180	18	8	48.3	151	22.5
125R100	40	325	155	250	198	503	270	188	220	26	8	48.3	185	34.5
125R100	16	325	155	250	198	503	250	188	210	18	8	48.3	185	30
150R125	40	350	175	266	221	651	300	218	250	26	8	48.3	231	48.5
150R125	16	350	175	266	221	651	285	212	240	22	8	48.3	231	42

MONOBALL KHO-SF

Welding end / Flange design

GENERAL FEATURES
- Fully welded ball valve with full and reduced bore
- Floating ball design, hollow ball with guiding tube DN 80 upwards
- High degree of resilience against pipework forces

CONNECTIONS
Flange connection according to EN 1092-1
Welding end in accordance with AGFW worksheet FW 401 – Part 5

DIMENSIONS
Length according to manufacturer standard

ACCEPTANCE TESTING
- Seat leak tightness: EN 12266-1 P12, leakage rate A
- Tightness to atmosphere: EN 12266-1 P11
- Shell-Strength: EN 12266-1 P10

TEMPERATURE RANGE
-5°C to +200°C

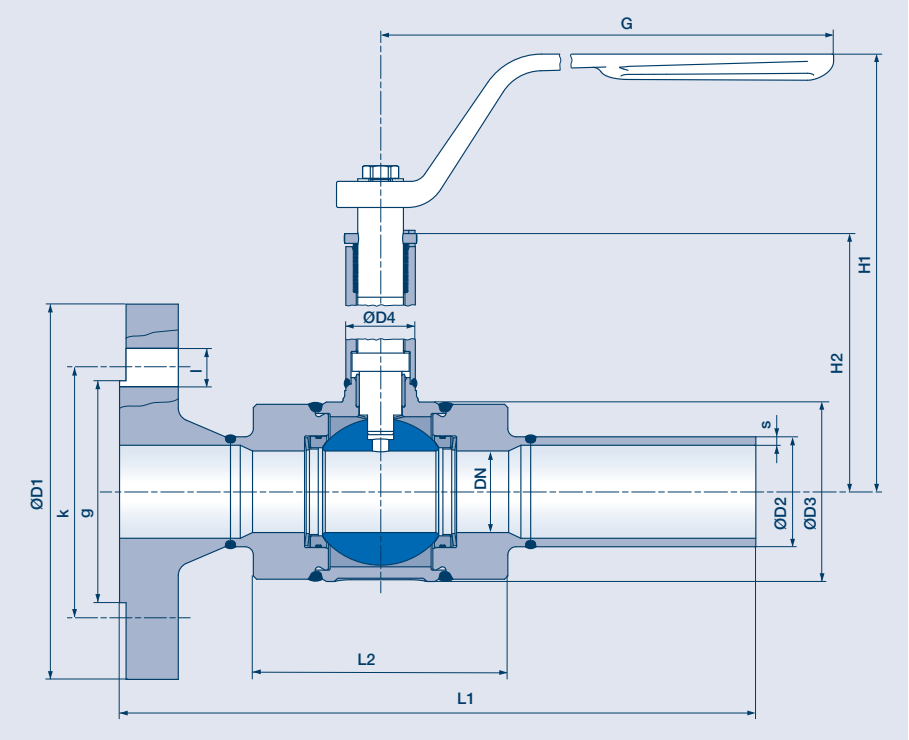

FULL BORE

DN	PN	L1	L2	H1	H2	G	ØD1	g	k	l	n	ØD2	s	ØD3	ØD4	weight
15	40	170	55	124	72	130	95	45	65	14	4	21.3	2.3	38	17.2	1.5
20	40	190	70	135	81	160	105	58	75	14	4	26.9	2.6	49	21.3	2.3
25	40	195	78	139	85	160	115	68	85	14	4	33.7	2.6	55	21.3	2.8
32	40	220	94	166	111	160	140	78	100	18	4	42.4	3.2	67	26.9	4.6
40	40	230	75	174	119	160	150	88	110	18	4	48.3	3.2	84	26.9	5.3
50	40	265	93	198	151	311	165	102	125	18	4	60.3	3.2	101	33.7	8.3
65	40	295	115	208	161	311	185	122	145	18	8	76.1	3.2	125	33.7	12.4
65	16	295	115	208	161	311	185	122	145	18	4	76.1	3.2	125	33.7	11.8
80	40	310	130	234	183	503	200	138	160	18	8	88.9	3.6	151	48.3	16.5
100	40	338	155	250	198	503	235	162	190	22	8	114.3	3.6	185	48.3	24
100	16	338	155	250	198	503	220	158	180	18	8	114.3	3.6	185	48.3	22.5
125	40	308	205	266	221	651	270	188	220	26	8	139.7	3.6	231	48.3	34.5
125	16	308	205	266	221	651	250	188	210	18	8	139.7	3.6	231	48.3	32.5

REDUCED BORE

DN	PN	L1	L2	H1	H2	G	ØD1	g	k	l	n	ØD2	s	ØD3	ØD4	weight
20R15	40	190	71	124	72	130	105	58	75	14	4	26.9	2.6	38	17.2	1.9
25R20	40	195	78	135	81	160	115	68	85	14	4	33.7	2.6	49	21.3	2.6
32R25	40	220	94	139	85	160	140	78	100	18	4	42.4	3.2	55	21.3	3.7
40R32	40	230	96	166	111	160	150	88	110	18	4	48.3	3.2	67	26.9	5
50R40	40	265	73	174	119	160	165	102	125	18	4	60.3	3.2	84	26.9	6.4
65R50	40	295	82	198	151	311	185	122	145	18	8	76.1	3.2	101	33.7	9.8
65R50	16	295	82	198	151	311	185	122	145	18	4	76.1	3.2	101	33.7	9.3
80R65	40	310	115	208	161	311	200	138	160	18	8	88.9	3.6	125	33.7	14
100R80	40	338	125	234	183	503	235	162	190	22	8	114.3	3.6	151	48.3	20
100R80	16	338	125	234	183	503	220	158	180	18	8	114.3	3.6	151	48.3	18.5
125R100	40	308	155	250	198	503	270	188	220	26	8	139.7	3.6	185	48.3	27.5
125R100	16	308	155	250	198	503	250	188	210	18	8	139.7	3.6	185	48.3	25
150R125	40	320	175	266	221	651	300	218	250	26	8	168.3	4	231	48.3	38.5
150R125	16	320	175	266	221	651	285	212	240	22	8	168.3	4	231	48.3	35.5

MONOBALL KHO-KK

Welding end / Threaded stud with cap

GENERAL FEATURES
» Fully welded ball valve with full and reduced bore
» Floating ball design
» High degree of resilience against pipework forces

CONNECTIONS
Threaded stud with cap
Welding end in accordance with AGFW worksheet FW 401 – Part 5

DIMENSIONS
Length according to manufacturer standard

ACCEPTANCE TESTING
» Seat leak tightness: EN 12266-1 P12, leakage rate A
» Tightness to atmosphere: EN 12266-1 P11
» Shell-Strength: EN 12266-1 P10

TEMPERATURE RANGE
-5°C to +200°C

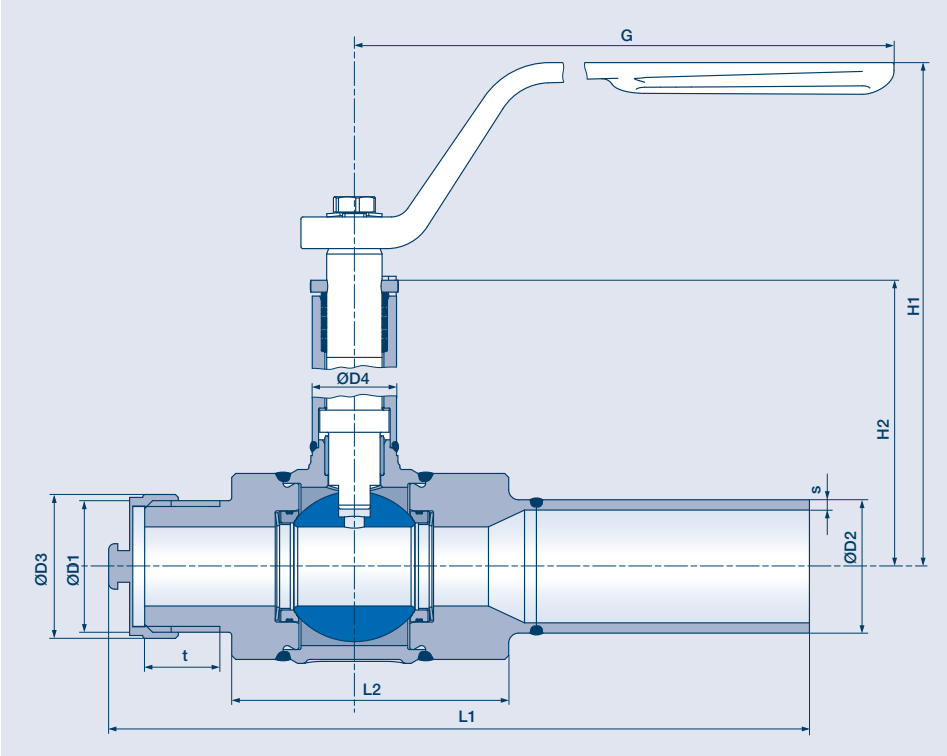

FULL BORE

DN	PN	L1	L2	H1	H2	G	ØD1	t	ØD2	s	ØD3	ØD4	weight
15	40	153	49.5	124	72	130	G 1/2"	15	21.3	2.3	38	17.2	0.7

REDUCED BORE

DN	PN	L1	L2	H1	H2	G	ØD1	t	ØD2	s	ØD3	ØD4	weight
20R15	40	165	58.5	124	72	130	G 3/4"	16	26.9	2.6	38	17.2	0.8
25R20	40	177	70	135	81	160	G 1"	19	33.7	2.6	49	21.3	1.4

MONOBALL
KHO-S ISO TOP

Welding ends with ISO TOP flange / DN 80-125

GENERAL FEATURES
» Fully welded ball valve with full and reduced bore
» Floating ball design, hollow ball with guiding tube DN 80 upwards
» High degree of resilience against pipework forces

CONNECTION
Welding ends in accordance with AGFW worksheet FW 401 - Part 5

DIMENSIONS
Length according to manufacturer standard

ACCEPTANCE TESTING
» Seat leak tightness: EN 12266-1 P12, leakage rate A
» Tightness to atmosphere: EN 12266-1 P11
» Shell-Strength: EN 12266-1 P10

AUTOMATION
Flange connection according to ISO 5211 enables direct construction of an actuator or via console

TEMPERATURE RANGE
-5°C to +200°C

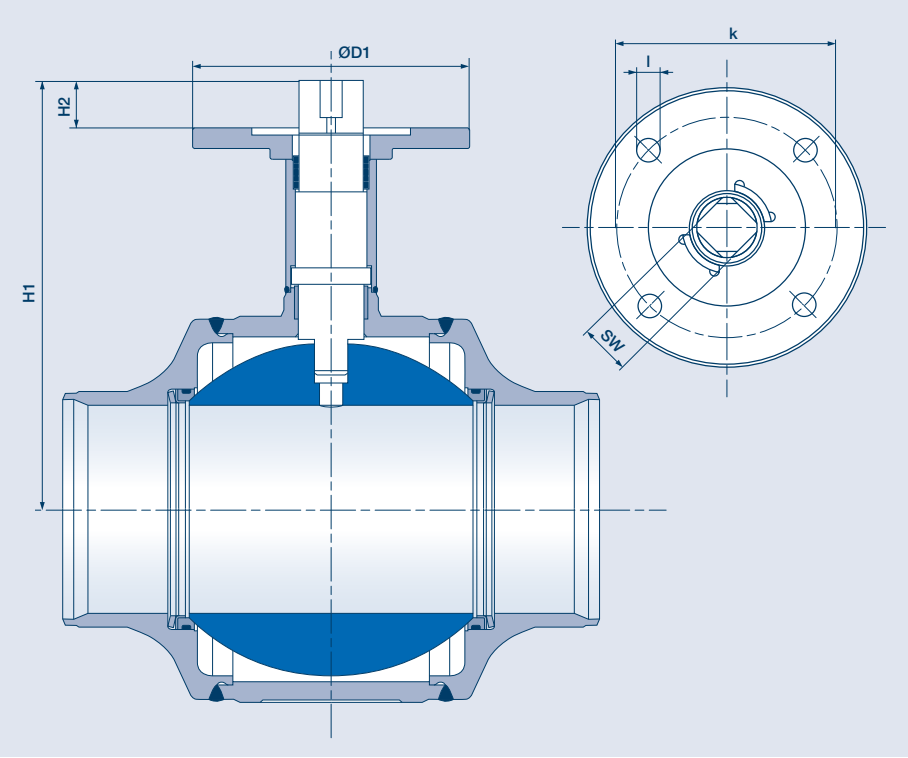

FULL BORE

DN	PN	ISO flange	H1	H2	ØD1 F10	l F10	k F10	ØD1 F12	l F12	k F12	SW
80	40	F10/F12	212	25	125	11	102	150	13	125	22
100	40	F10/F12	227	25	125	11	102	150	13	125	22
125	40	F10/F12	256	28	125	11	102	150	13	125	27

REDUCED BORE

DN	PN	ISO flange	H1	H2	ØD1 F10	l F10	k F10	ØD1 F12	l F12	k F12	SW
100R80	40	F10/F12	212	25	125	11	102	150	13	125	22
125R100	40	F10/F12	227	25	125	11	102	150	13	125	22
150R125	40	F10/F12	256	28	125	11	102	150	13	125	27

MONOBALL KHO-F ISO TOP

Flange design with ISO TOP flange / DN 80-125

GENERAL FEATURES

» Fully welded ball valve with full and reduced bore
» Floating ball design, hollow ball with guiding tube DN 80 upwards
» High degree of resilience against pipework forces

CONNECTION

Flange connection according to EN 1092-1

DIMENSIONS

Length according to EN 558-1, series 1 ≤ DN 100, series 27 ≥ DN 125

ACCEPTANCE TESTING

» Seat leak tightness: EN 12266-1 P12, leakage rate A
» Tightness to atmosphere: EN 12266-1 P11
» Shell-Strength: EN 12266-1 P10

AUTOMATION

Flange connection according to ISO 5211 enables direct construction of an actuator or via console

TEMPERATURE RANGE

-5°C to +200°C

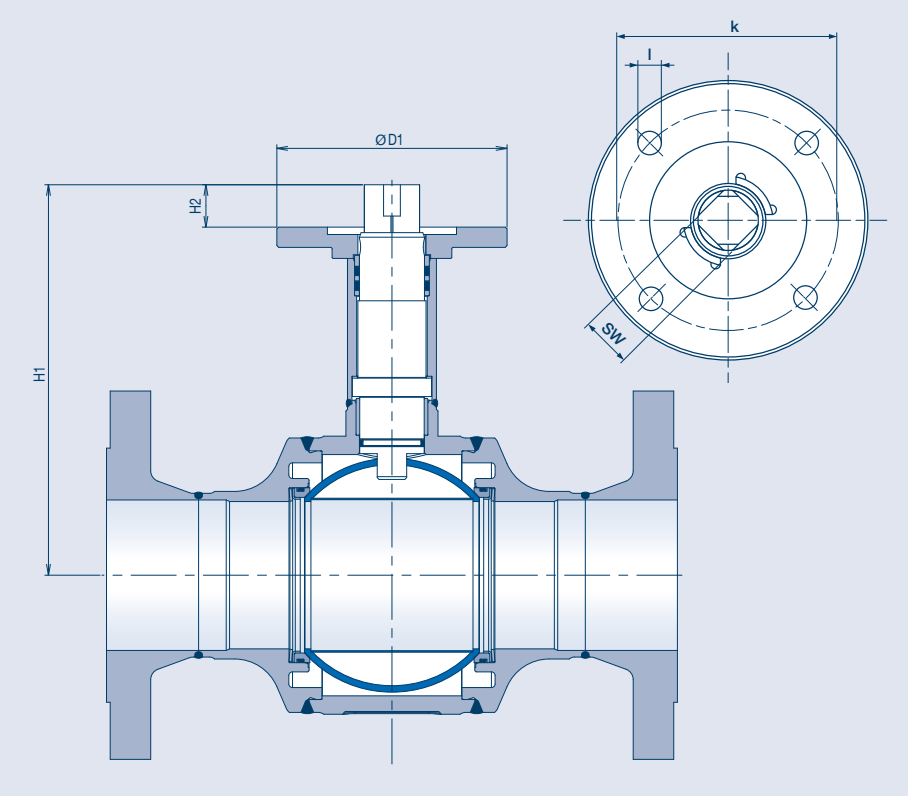

FULL BORE

DN	PN	ISO flange	H1	H2	ØD1 F10	l F10	k F10	ØD1 F12	l F12	k F12	SW
80	40	F10/F12	212	25	125	11	102	150	13	125	22
100	40	F10/F12	227	25	125	11	102	150	13	125	22
125	40	F10/F12	256	28	125	11	102	150	13	125	27

REDUCED BORE

DN	PN	ISO flange	H1	H2	ØD1 F10	l F10	k F10	ØD1 F12	l F12	k F12	SW
100R80	40	F10/F12	212	25	125	11	102	150	13	125	22
125R100	40	F10/F12	227	25	125	11	102	150	13	125	22
150R125	40	F10/F12	256	28	125	11	102	150	13	125	27

MONOBALL
KHO-S ISO TOP

Welding ends with ISO TOP flange / DN 150-250

GENERAL FEATURES

» Fully welded ball valve with full bore
» Floating ball design, hollow ball with guiding tube
» High degree of resilience against pipework forces

CONNECTION

Welding ends in accordance with AGFW worksheet FW 401 - Part 5

DIMENSIONS

Length according to manufacturer standard

ACCEPTANCE TESTING

» Seat leak tightness: EN 12266-1 P12, leakage rate A
» Tightness to atmosphere: EN 12266-1 P11
» Shell-Strength: EN 12266-1 P10

AUTOMATION

Flange connection according to ISO 5211 enables direct construction of an actuator or via console

TEMPERATURE RANGE

-5°C to +200°C

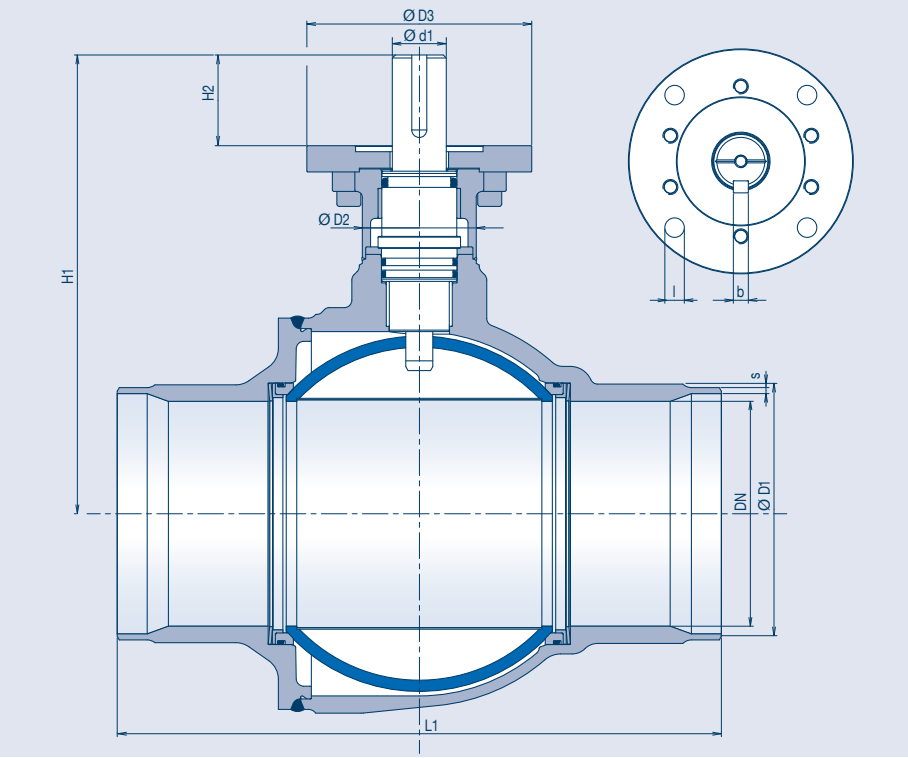

FULL BORE

DN	PN	L1	H1	ØD1	s	ØD2	ISO flange	H2	ØD3	Ød1	b	weight
150	25	403	306	168.3	4	76	F12	60.5	150	36	10	38
200	25	419	347	219.1	4.5	76	F12	60.5	150	36	10	63
250*	*25*	457	451	273	5	108	F16	78.5	210	60	18	94

** designed for a maximum differential pressure of 16 bar*

MONOBALL KHO-F ISO TOP

Flange design with ISO flange / DN 150-250

GENERAL FEATURES

» Fully welded ball valve with full bore
» Floating ball design, hollow ball with guiding tube
» High degree of resilience against pipework forces

CONNECTION

Flange connection according to EN1092-1

DIMENSIONS

Length according to EN 558-1, series 27

ACCEPTANCE TESTING

» Seat leak tightness: EN 12266-1 P12, leakage rate A
» Tightness to atmosphere: EN 12266-1 P11
» Shell-Strength: EN 12266-1 P10

AUTOMATION

Flange connection according to ISO 5211 enables direct construction of an actuator or via console

TEMPERATURE RANGE

-5°C to +200°C

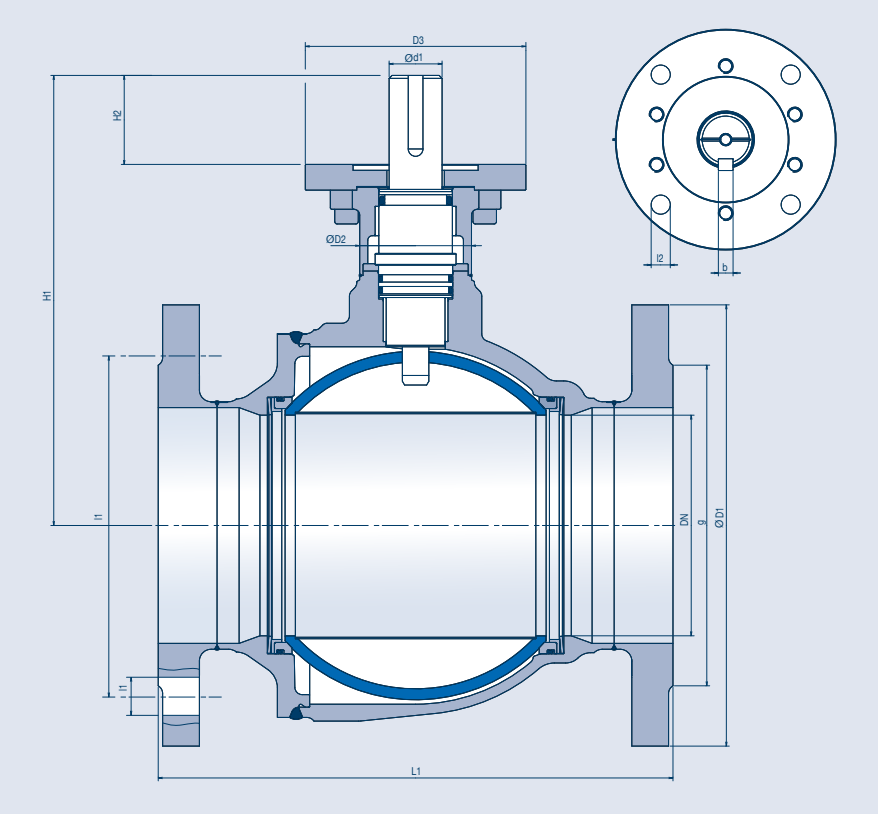

FULL BORE

DN	PN	L1	H1	ØD1	g	k1	l1	n	ØD2	ISO flange	H2	ØD3	l2	k2	Ød1	b	weight
150	25	350	306	300	218	250	26	8	76	F12	60.5	150	13	125	36	10	52
150	16	350	306	285	212	240	22	8	76	F12	60.5	150	13	125	36	10	46
200	25	400	347	360	278	310	26	12	76	F12	60.5	150	13	125	36	10	90
200	16	400	247	340	268	295	22	12	76	F12	60.5	150	13	125	36	10	83
250*	*25*	450	451	425	335	370	30	12	108	F16	78.5	210	22	165	60	18	130
250	16	450	451	405	320	355	26	12	108	F16	78.5	210	22	165	60	18	119

** designed for a maximum differential pressure of 16 bar*

THE SYSTEM FOR UNDER-GROUND SOLUTIONS

Guaranteed reliability under challenging conditions

MONOBALL KHO-U

The KLINGER Monoball KHO-U ball valve is used for underground installations in the area of district heating, district cooling, heating and air conditioning technology as well as in general plant engineering. Durable, functional, maintenance-free and user-friendly are just some of the many advantages.

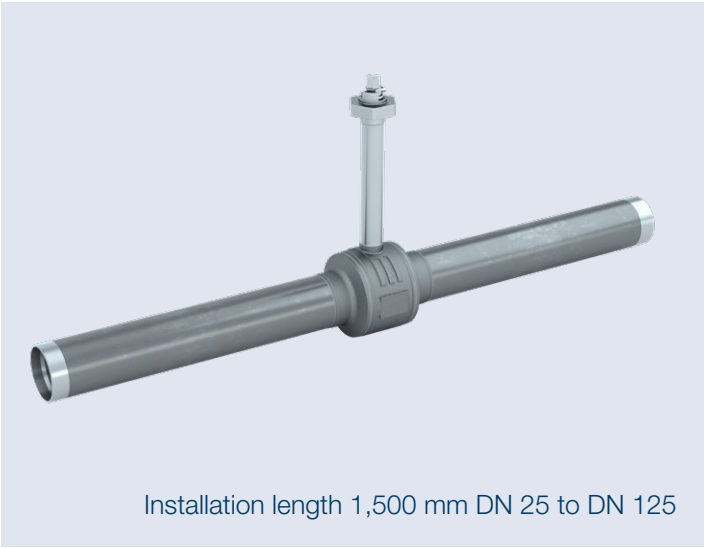

Installation length 1,500 mm DN 25 to DN 125

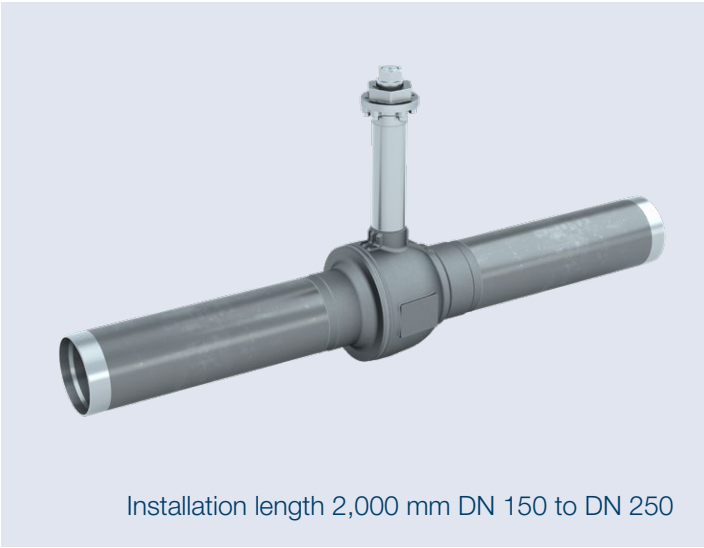

Installation length 2,000 mm DN 150 to DN 250

DRAIN & VENT VALVES

The main component of every KLINGER drain and vent valve is a fully welded, maintenance-free and durable Monoball KHO ball valve made of rust and acid-proof stainless steel. The ball valve is fitted with a factory default welded-on carbon steel pipe. In addition to numerous standard variants for a wide range of operational needs, customerspecific special solutions can also be supplied. Alternatively, multiple connection types (threaded sleeve, screwed end, welding end or flange) can be selected. Delivery options, depending on the connection type, also include e.g. a threaded plug with a relief groove or a blind flange with a test plug for tightness checks in order to ensure a high degree of operational safety against scalding.





Example of a drain and vent valve with plug and end cap



Example of a drain and vent valve with flange

The factory-prefabricated components enable time-saving installation. The adaptation to the earth cover on the construction site can be carried out without much effort. The fitting is operated either via an operating hexagon or via a hand lever with a hole for operation with shaft hook. With the hand lever version, the position is indicated by the position of the hand lever. With the operating hexagon a marking and a red pointer tip provide a clear position indication.

THE SYSTEM FOR UNDERGROUND SOLUTIONS

Guaranteed reliability under challenging conditions



BRANCHING VALVE

The Monoball KHO branching valve is used to enhance a construction section that will be continued at a later time. Welded-in as an end piece, the existing pipe can be continued at any time without the pipeline having to be drained and taken out of service.



HOT TAPPING VALVE

The Monoball KHO hot tapping valve is suitable for non-abrasive media such as district heat. Used for expanding the pipeline network in ongoing operation under temperature and pressure. This allows new customers to be connected to the existing pipeline network at full operating pressure and temperature. There is no need to empty, fill and vent the existing pipe network: This means significant time and cost savings.

STEM EXTENSIONS

KLINGER offers extension adapters, which enable the adaptation of the already insulated and installed valves to the actual depth by means of simple reduction at the construction site. The underground extensions, which can be reduced in length on site, are available in the following lengths: 1 m, 1.5 m and 2 m, in three different versions.

STEM EXTENSION SMALL
The small version of operating stem extension is used for DN 25-65. Depending on the nominal width, they can be operated with a T-handle wrench.



STEM EXTENSION MEDIUM
The medium version of operating stem extension is used for DN 80-125. Depending on the nominal width, they can be operated with a mobile and practical mounted gearbox.



STEM EXTENSION LARGE
The large version of operating stem extension is used for DN 150-250. Depending on the nominal width, they can be operated either with a T-handle wrench or with a mobile and practical mounted gearbox.



MONOBALL KHO-U

DN 25-125

GENERAL FEATURES
» Fully welded ball valve with full and reduced bore
» Certified according to EN 488:2019 and EHP 003
» Floating ball design, hollow ball with guiding tube DN 80 upwards
» Long shaft and welding ends for pre-insulation
» High degree of resilience against pipework forces
» Complete shaft construction made of stainless steel

CONNECTION
Welding ends in accordance with AGFW worksheet FW 401 – Part 5

DIMENSIONS
Length according to manufacturer standard

ACCEPTANCE TESTING
» Seat leak tightness: EN 12266-1 P12, leakage rate A
» Tightness to atmosphere: EN 12266-1 P11
» Shell-Strength: EN 12266-1 P10

AUTOMATION
Starting from DN 80 automatable with mobile slip-on gear

TEMPERATURE RANGE
-5°C to +200°C

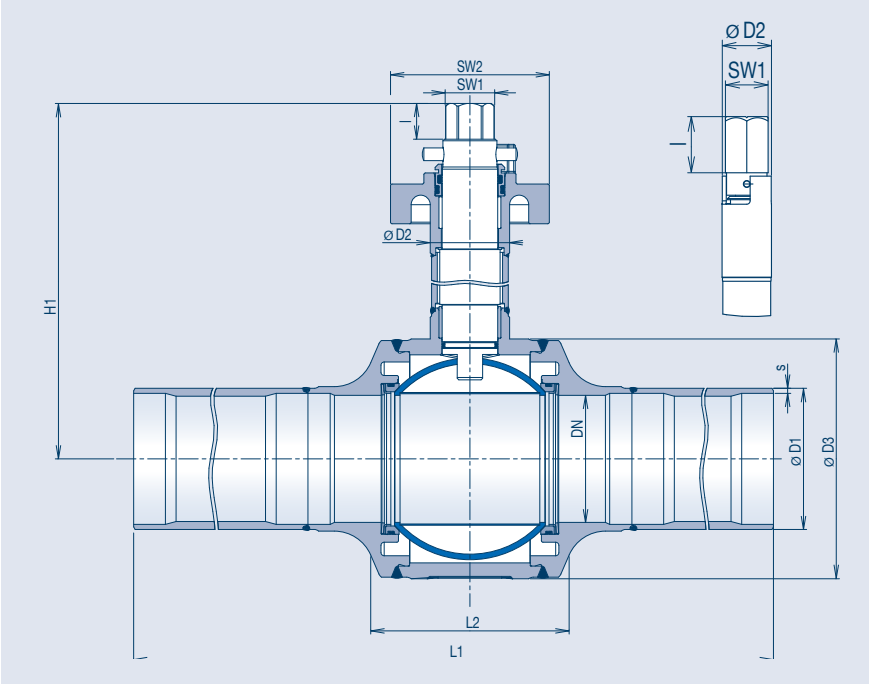

FULL BORE

DN	PN	L1	L2	H1	ØD1	s	ØD2	ØD3	l	SW1	SW2	weight
25	40	1500	78	404	33.7	2.6	22	55	25	19	–	6
32	40	1500	94	410	42.4	3.2	30	67	25	19	–	8.5
40	40	1500	75	418	48.3	3.2	30	84	25	19	–	9.5
50	40	1500	93	433	60.3	3.2	38	101	28	19	–	15.5
65	40	1500	115	443	76.1	3.2	38	125	28	19	–	20.5
80	40	1500	130	457	88.9	3.2	50	151	22.5	27	90	27
100	40	1500	155	472	114.3	3.6	50	185	22.5	27	90	38.5
125	40	1500	205	495	139.7	3.6	50	231	22.5	27	90	51

REDUCED BORE

DN	PN	L1	L2	H1	ØD1	s	ØD2	ØD3	l	SW1	SW2	weight
32R25	40	1500	94	404	42.4	3.2	22	55	25	19	–	7.5
40R32	40	1500	96	410	48.3	3.2	30	67	25	19	–	9
50R40	40	1500	73	418	60.3	3.2	30	84	25	19	–	13
65R50	40	1500	82	433	76.1	3.2	38	101	28	19	–	18
80R65	40	1500	115	443	88.9	3.2	38	125	28	19	–	23
100R80	40	1500	125	457	114.3	3.6	50	151	22.5	27	90	34.5
125R100	40	1500	155	472	139.7	3.6	50	185	22.5	27	90	44.5
150R125	40	2000	175	495	168.3	4	50	231	22.5	27	90	72.5

MONOBALL KHO-U

DN 150-250

GENERAL FEATURES
» Fully welded ball valve with full bore
» Certified according to EN 488:2019 and EHP 003
» Floating ball design, hollow ball with guiding tube
» Long shaft and welding ends for pre-insulation
» High degree of resilience against pipework forces
» Complete shaft construction made of stainless steel

CONNECTION
Welding ends in accordance with
AGFW worksheet FW 401 – Part 5

DIMENSIONS
Length according to manufacturer standard

ACCEPTANCE TESTING
» Seat leak tightness: EN 12266-1 P12, leakage rate A
» Tightness to atmosphere: EN 12266-1 P11
» Shell-Strength: EN 12266-1 P10

AUTOMATION
Automatable with mobile slip-on gear

TEMPERATURE RANGE
-5°C to +200°C

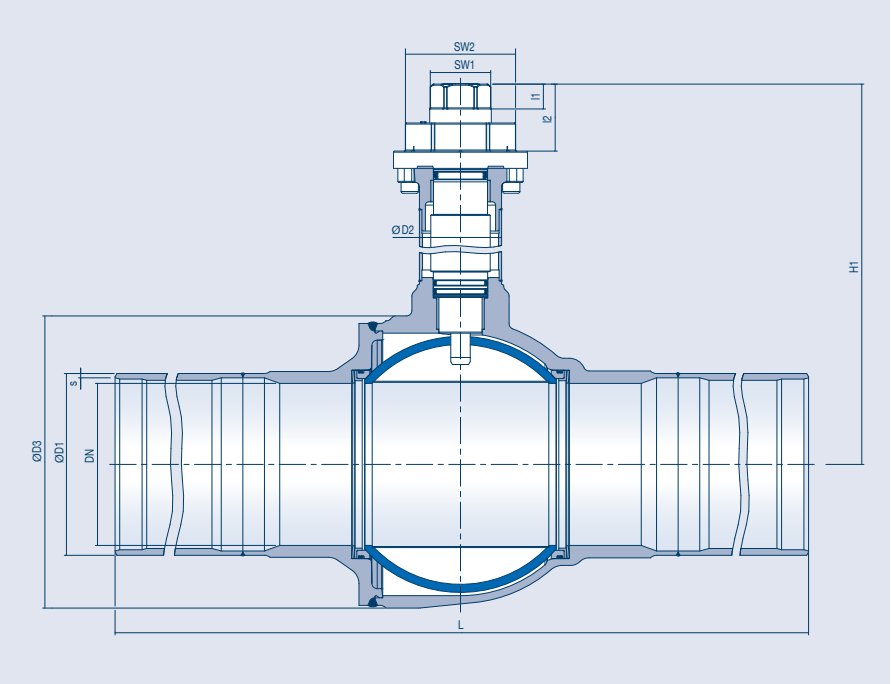

FULL BORE

DN	PN	L1	H1	ØD1	s	ØD2	ØD3	l	SW1	SW2	weight
150	25	2000	526	168.3	4	76	266	23	50	90	83
200	25	2000	567	219.1	4.5	76	362	23	50	90	126
250*	*25*	2000	633	273	5	108	426	35	50	90	182

** designed for a maximum differential pressure of 16 bar*

MONOBALL KHO-SF/SKT

Drain/Vent – Flange, actuation via hexagon

GENERAL FEATURES
» Fully welded ball valve with full and reduced bore
» Pipe forces according to EN 488:2019
» Floating ball design
» With welded carbon steel tube (length 1000 mm)
» High degree of resilience against pipework forces

CONNECTION
Welding end with carbon steel tube /
Flanged end with blind flange

DIMENSIONS
Length according to manufacturer standard

ACCEPTANCE TESTING
» Seat leak tightness: EN 12266-1 P12, leakage rate A
» Tightness to atmosphere: EN 12266-1 P11
» Shell-Strength: EN 12266-1 P10

AUTOMATION
Actuation with hexagon

TEMPERATURE RANGE
» -5°C to +200°C

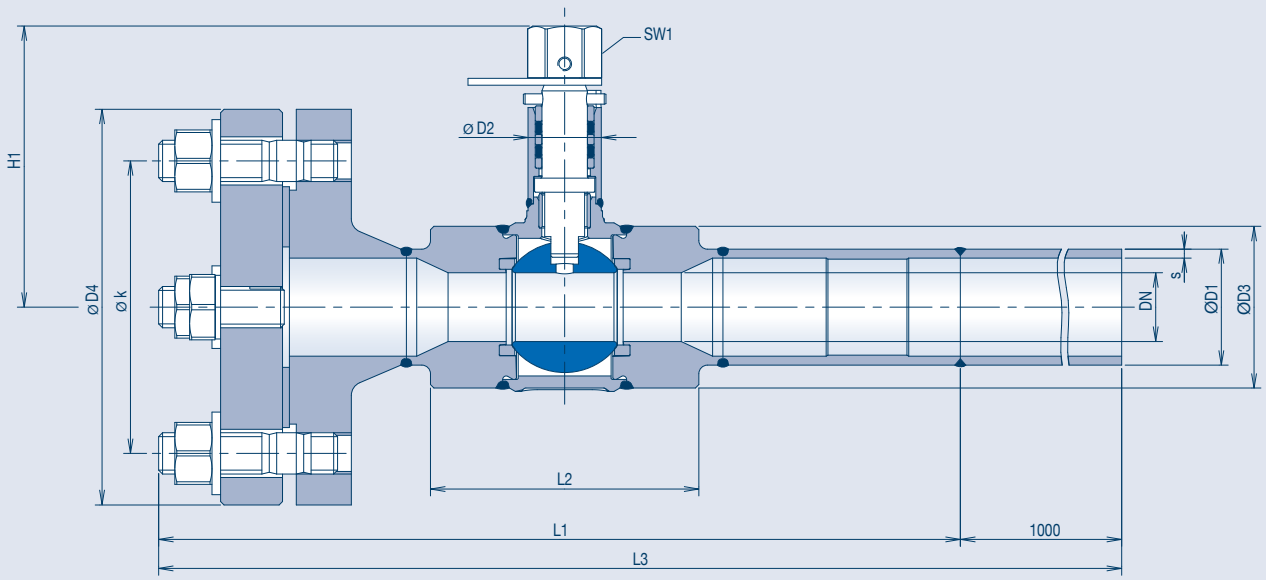

FULL BORE

DN	PN	L1	L2	L3	H1	ØD1	s	ØD2	ØD3	ØD4	Øk	n	SW1	weight
80	40	358	130	1358	159	88.9	3.6	48.3	151	200	160	8	22	29

REDUCED BORE

DN	PN	L1	L2	L3	H1	ØD1	s	ØD2	ØD3	ØD4	Øk	n	SW1	weight
25R20	40	233	78	1233	82	33.7	2.6	21.3	49	115	85	4	19	6
50R40	40	309	73	1309	106	60.3	3.2	26.9	84	165	125	4	19	14.5

MONOBALL KHO-SZ

Drain/Vent – Male thread with cap, actuation via hexagon / hand lever

GENERAL FEATURES
» Fully welded ball valve with reduced bore
» Pipe forces according to EN 488:2019
» Floating ball design
» With welded carbon steel tube (length 1000mm)
» High degree of resilience against pipework forces

CONNECTION
Connection welding end / male thread with cap
Reduced bore

DIMENSIONS
Length according to manufacturer standard

ACCEPTANCE TESTING
» Seat leak tightness: EN 12266-1 P12, leakage rate A
» Tightness to atmosphere: EN 12266-1 P11
» Shell-Strength: EN 12266-1 P10

AUTOMATION
Actuation with hexagon or hand lever

TEMPERATURE RANGE
-5°C to +200°C

KHO-SZ/SKT

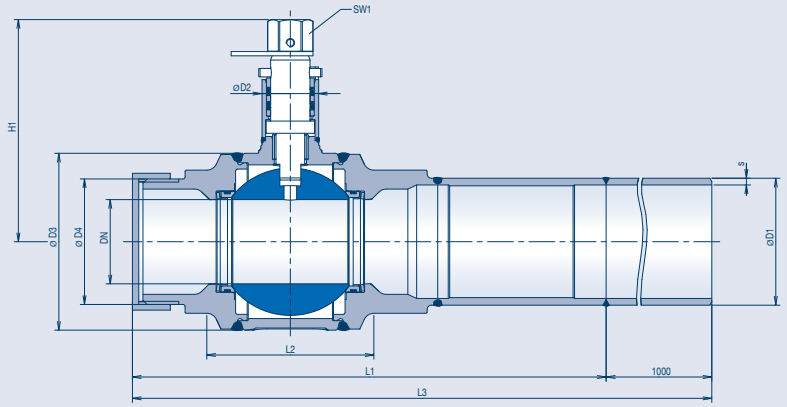

KHO-SZ/H

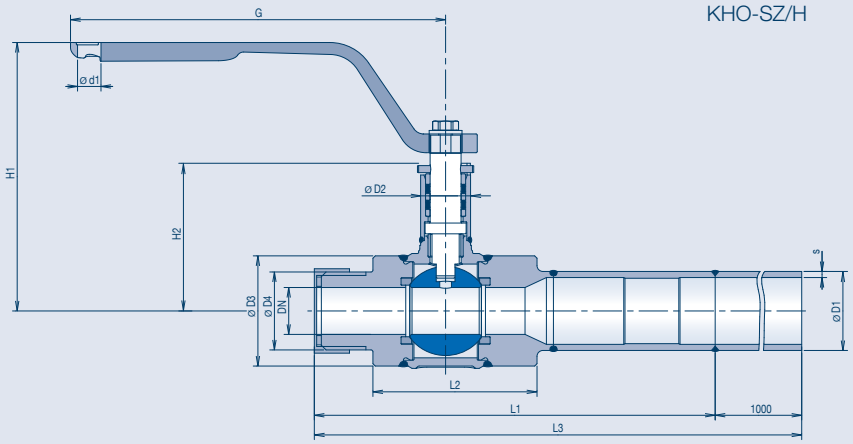

REDUCED BORE – KHO-SZ/SKT

DN	PN	L1	L2	L3	H1	ØD1	s	ØD2	ØD3	ØD4	SW1	weight
50R40	40	225	73	1225	106	60.3	3.2	26.9	84	G 2"	19	8

REDUCED BORE – KHO-SZ/H

DN	PN	L1	L2	L3	H1	H2	ØD1	s	ØD2	ØD3	ØD4	Ød1	G	weight
25R20	40	171	70	1171	115	63	33.7	2.6	21.3	49	G 1"	10	160	3.5

MONOBALL KHO-SM/H

Drain/Vent – Female thread with plug, actuation via hand lever

GENERAL FEATURES
» Fully welded ball valve with reduced bore
» Pipe forces according to EN 488:2019
» Floating ball design
» With welded carbon steel tube (length 1000 mm)
» High degree of resilience against pipework forces

CONNECTION
Connection welding end / internal thread with plug
Reduced bore

DIMENSIONS
Length according to manufacturer standard

ACCEPTANCE TESTING
» Seat leak tightness: EN 12266-1 P12, leakage rate A
» Tightness to atmosphere: EN 12266-1 P11
» Shell-Strength: EN 12266-1 P10

AUTOMATION
Actuation with hand lever

TEMPERATURE RANGE
-5°C to +200°C

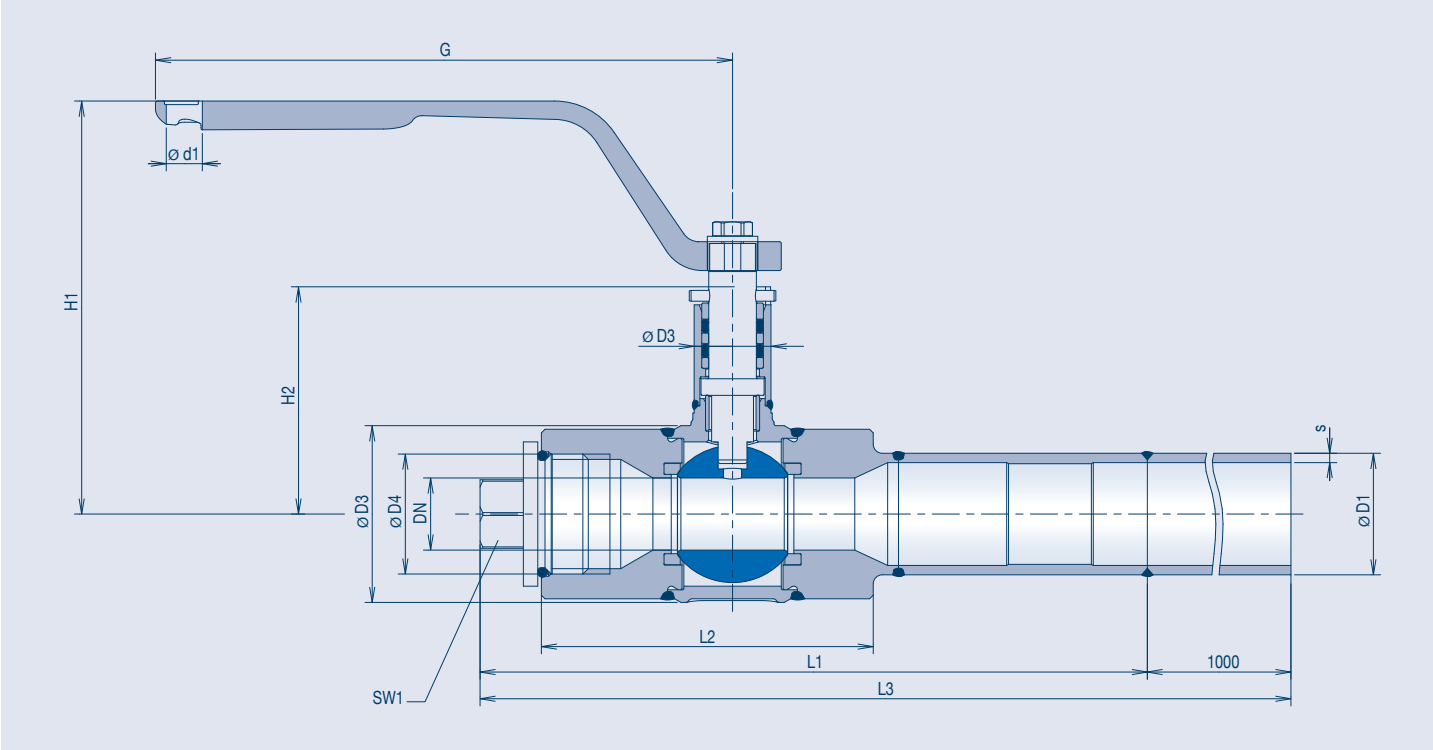

REDUCED BORE

DN	PN	L1	L2	L3	H1	H2	ØD1	s	ØD2	ØD3	ØD4	Ød1	G	SW1	weight
25R20	40	185	92	1185	115	63	33.7	2.6	21.3	49	G 1"	10	160	19	3.5
50R40	40	171	70	1171	138	83	60.3	3.2	26.9	84	G 2"	10	160	19	9

MONOBALL KHO-BH

Branching valve

GENERAL FEATURES
» Fully welded ball valve with full and reduced bore
» Pipe forces according to EN 488:2019
» Floating ball design
» High degree of resilience against pipework forces
» Equipped with cap to seal the shaft after final use. Cap secured with magnet
» Double O-ring stem sealing

CONNECTION
Welding ends in accordance with AGFW worksheet FW 401 – Part 5

DIMENSIONS
Length according to manufacturer standard

ACCEPTANCE TESTING
» Seat leak tightness: EN 12266-1 P12, leakage rate A
» Tightness to atmosphere: EN 12266-1 P11
» Shell-Strength: EN 12266-1 P10

TEMPERATURE RANGE
-5°C to +200°C

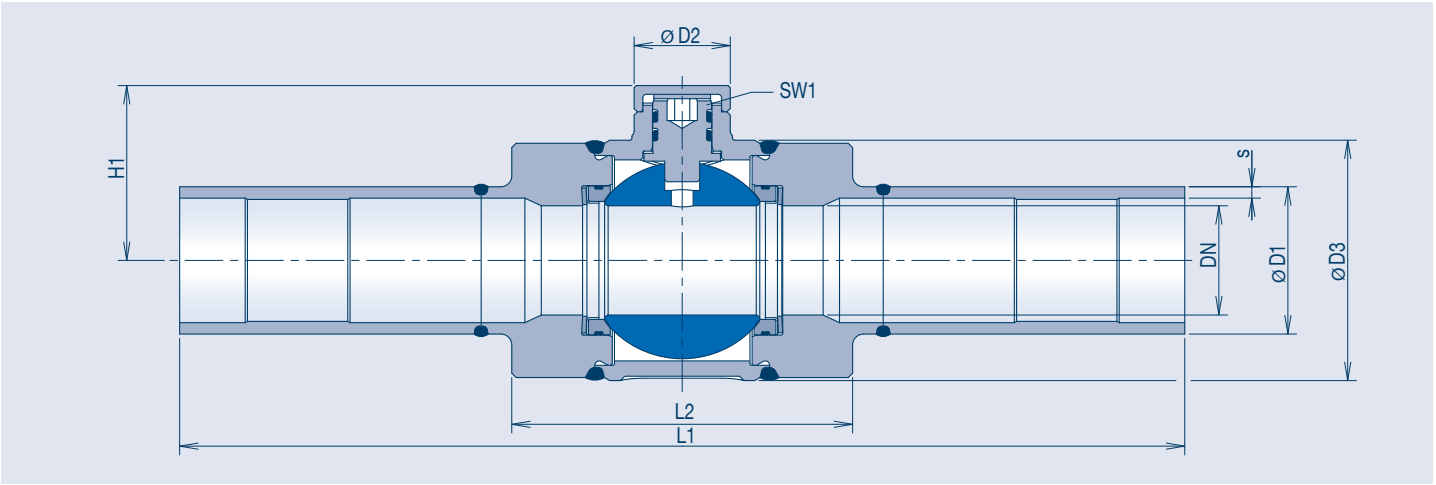

FULL BORE

DN	PN	L1	L2	H1	ØD1	s	ØD2	ØD3	SW1	weight
20	40	230	70	37	26.9	2.6	22	49	6	1
25	40	230	78	40	33.7	2.6	22	55	6	1.5
32	40	260	94	46	42.4	3.2	28	67	8	2.5
40	40	260	75	54	48.3	3.2	28	84	8	3
50	40	300	93	68	60.3	3.2	35	101	10	4.5
65	40	300	115	78	76.1	3.2	35	125	10	8
80	40	310	130	99	88.9	3.6	50	151	12	9.5
100	40	325	155	114	114.3	3.6	50	185	12	15.5

REDUCED BORE

DN	PN	L1	L2	H1	ØD1	s	ØD2	ØD3	SW1	weight
25R20	40	230	78	37	33.7	2.6	22	49	6	1.5
32R25	40	260	94	40	42.4	3.2	22	55	6	2
40R32	40	260	96	46	48.3	3.2	28	67	8	2.5
50R40	40	300	73	54	60.3	3.2	28	84	8	3.5
65R50	40	300	82	68	76.1	3.2	35	101	10	5.5
80R65	40	310	115	78	88.9	3.6	35	125	10	8.5
100R80	40	325	125	99	114.3	3.6	50	151	12	11.5
125R100	40	290	155	114	139.7	3.6	50	185	12	17

MONOBALL KHO-AB

Hot tapping valve

GENERAL FEATURES
» Fully welded ball valve with full bore
» Pipe forces according to EN 488:2019
» Floating ball design
» High degree of resilience against pipework forces
» Tapping system Hütz+Baumgarten
» Equipped with cap to seal the shaft after final use. Cap secured with magnet
» Double O-ring stem sealing

CONNECTION
According to manufacturer standard

DIMENSIONS
Length according to manufacturer standard

ACCEPTANCE TESTING
» Seat leak tightness: EN 12266-1 P12, leakage rate A
» Tightness to atmosphere: EN 12266-1 P11
» Shell-Strength: EN 12266-1 P10

TEMPERATURE RANGE
-5°C to +200°C

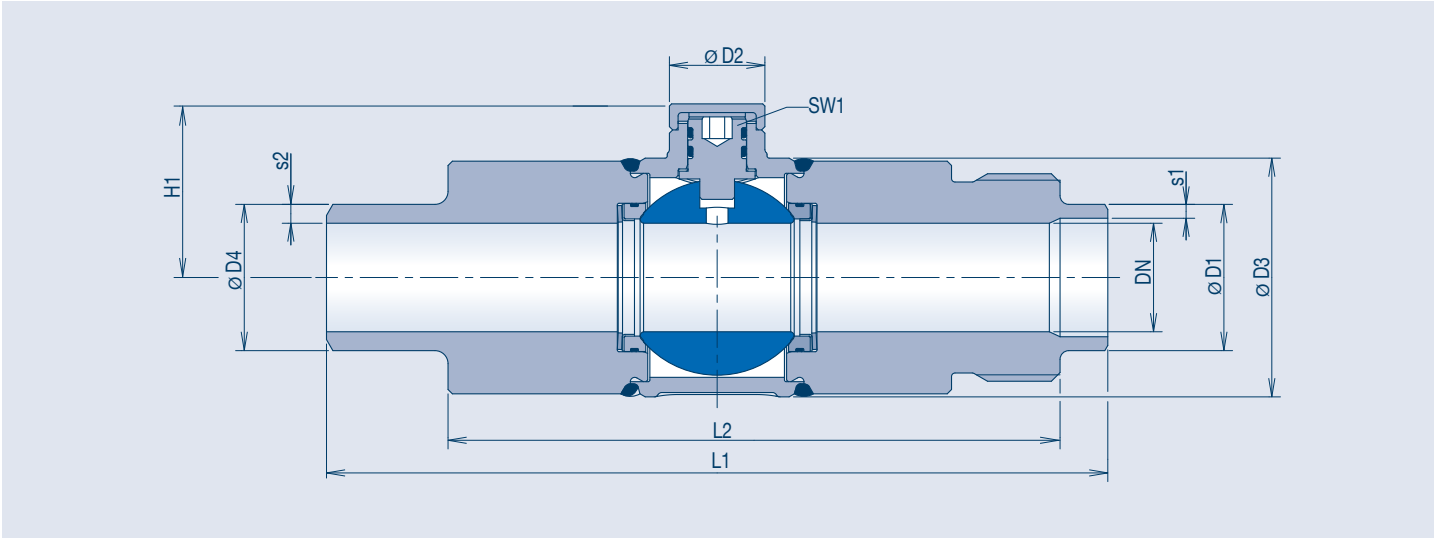

FULL BORE

DN	PN	L1	L2	H1	ØD1	s1	ØD2	ØD3	ØD4	s2	G	SW1	weight
20	40	170	106	37	26.9	2.6	22	49	26.9	3.4	1"	6	1.5
25	40	180	116	40	33.7	3.2	22	55	33.7	4.3	1 1/2"	6	2
32	40	200	161	46	42.4	3.2	28	67	42.4	5.2	1 1/2"	8	3
40	40	210	93	54	48.3	3.2	28	84	51	5	2 1/2"	8	3.5
50	40	240	119	68	60.3	3.6	35	101	60.3	5	2 1/2"	10	6
65	40	260	147	78	76.1	3.6	35	125	76.1	5.6	2 3/4"	10	9
80	40	280	123	99	88.9	4.1	50	151	95	6.6	3"	12	10
100	40	300	145	114	114.3	4.6	50	185	114.3	7.5	4"	12	15.5

STEM EXTENSIONS

Small, DN 25-65

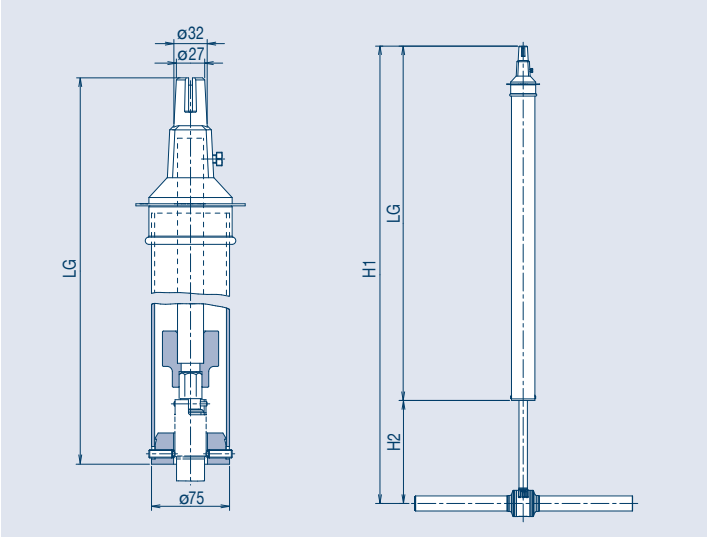

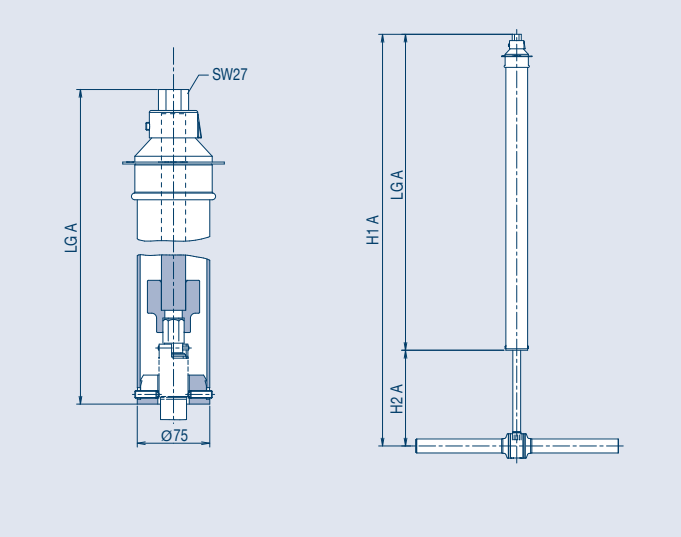

SMALL

DN	H1	H2	LG	H1 A	H2 A	LG A
25 / 32R25	1450 - 2450	315	1135 - 2135	1417 - 2417	328	1089 - 2089
32 / 40R32	1457 - 2457	322	1135 - 2135	1424 - 2424	335	1089 - 2089
40 / 50R40	1465 - 2465	330	1135 - 2135	1432 - 2432	343	1089 - 2089
50 / 65R50	1479 - 2479	344	1135 - 2135	1447 - 2447	357	1089 - 2089
65 / 80R65	1489 - 2489	354	1135 - 2135	1456 - 2456	367	1089 - 2089

Medium, DN 80-125 / Large, DN 150-250

MEDIUM

DN	H1	H2	LG	□
80 / 100R80	1449 - 2449	372	1077 - 2077	70
100 /125R100	1463 - 2463	386	1077 - 2077	70
125 / 150R125	1495 - 2495	418	1077 - 2077	70

LARGE

DN	H1	H2	LG	□
150	1515 - 2515	440	1075 - 2075	90
200	1548 - 2548	473	1075 - 2075	90
250	1583 - 2083	508	1075 - 1575	90

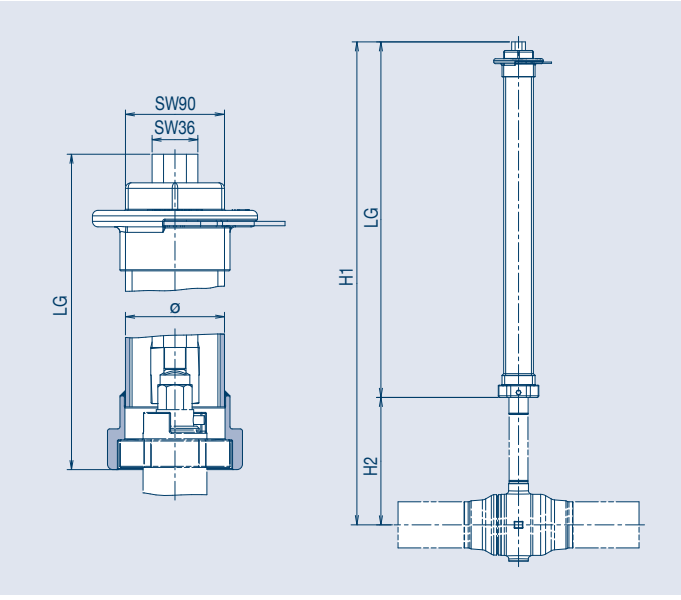

TECHNICAL DETAILS

Application design for standard and underground solutions

Pressure and temperature range KHO

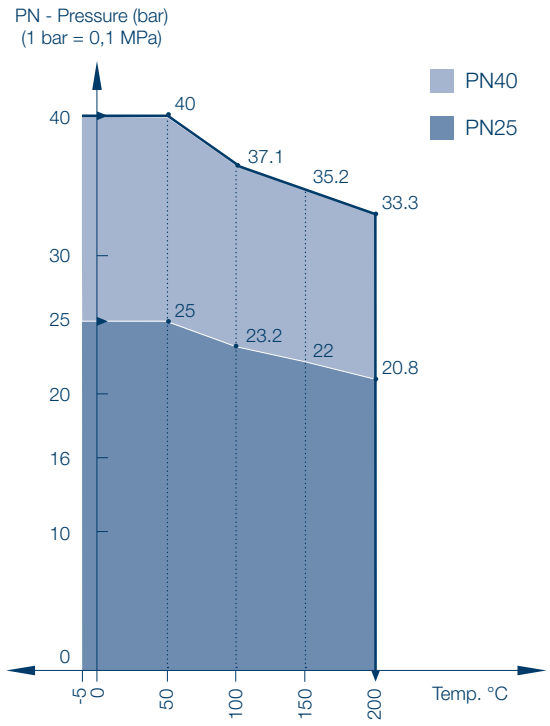

Pressure and temperature range KHO-U

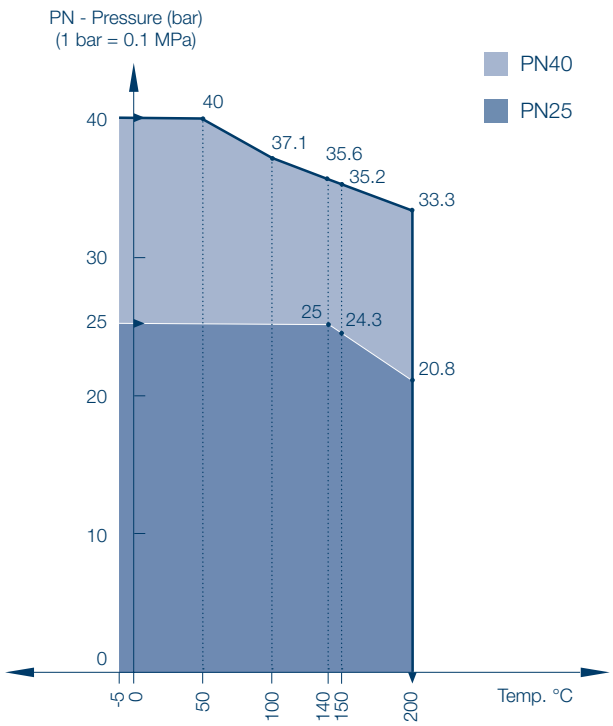

Torques

Nominal diameter DN	Differential pressure	Torque
mm	bar	Nm
15 / 20R15	40	8
20 / 25R20	40	12
25 / 32R25	40	20
32 / 40R32	40	28
40 / 50R40	40	42
50 / 65R50	40	60
65 / 80R65	40	110
80 / 100R80	40	190
100 / 125R100	40	320
125 / 150R125	40	490
150	25	530
200	25	690
250	16	1420

For standard computations, KLINGER Fluid Control recommends the factor 1.5, i.e. using plus 50 %.

TECHNICAL DETAILS

Application design for standard and underground solutions

Flow Values

FULL BORE

DN (mm)	ζ	K_{vs}-Wert
15	0.389	14.4
20	0.405	25.1
25	0.310	44.8
32	0.265	79.5
40	0.185	149
50	0.103	312
65	0.099	537
80	0.156	647
100	0.181	939
125	0.227	1310
150	0.237	1845
200	0.220	3408
250	0.193	5688

REDUCED BORE

DN (mm)	ζ	K_{vs}-Wert
20R15	1.470	13.2
25R20	1.052	24.4
32R25	1.273	36.3
40R32	0.881	68.1
50R40	0.787	113
65R50	0.922	176
80R65	0.624	324
100R80	0.687	482
125R100	0.689	752
150R125	0.701	1074

SIZE OF BALL VALVE

Flow rate	Q	in m^3/h
Pressure loss	Δp	in bar
Density	ρ	in kg/m^3
Velocity	w	in m/s
Flow coefficient	K_v	in m^3/h
Pressure loss coefficient	ζ	

Allows for the calculation of:

$$K_v = Q * \sqrt{\frac{\rho}{1000 * \Delta p}}$$

or

$$\zeta = \frac{2 * \Delta p * 10^5}{\rho * w^2}$$

The valve is to be selected in a manner that the K_v-value is greater, or the ζ-value less than the computed value for the application.

TECHNICAL DETAILS

Bill of material – Monoball KHO

Parts list

Pos.	number	name	material
1	1	Housing	1.0619
2	2	End-piece	S235J / 1.0619
3	1	Operating Shaft	1.4104
4	1	Ball	AISI 316F, 1.4408 / AISI 304 ab DN80
5	1	Shaft	P235GH
6	2	Belleville washer	1.4310
7	2	Sealing ring holder	1.4301
8	2	Sealing ring	KFC-25
9	2	O-Ring	FEPM
10	1	Bearing bush	St/Bz/PTFE
11	1	Bearing disc	KFC-15
12	2	O-Ring	FKM
13	2	Spacer	KFC
14	1	Spacer	1.4104
15	1	Grooved pin	1.4305
16	[1]	Hand lever	1.4408
17	2	Weld-on pipe	P235GH
17	2	Flange end	P250GH
18	1	Washer	1.8159
19	1	Hexagon screw	A4

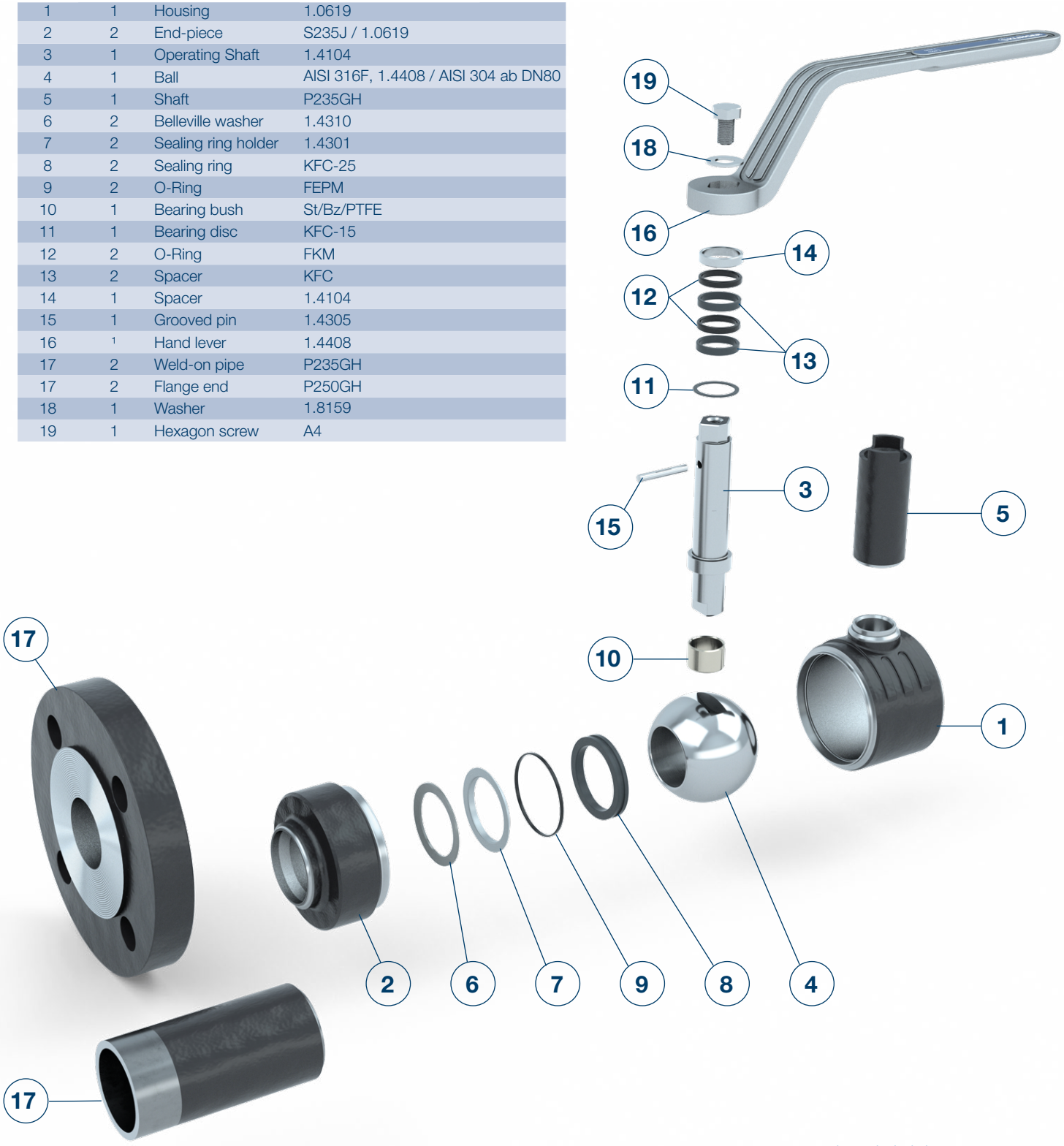

example exploded view
up to DN 125 with hand lever

TECHNICAL DETAILS

Bill of material – Monoball KHO-U

Parts list

Pos.	number	name	material
1	1	Housing	1.0619
2	2	End-piece	S355J / S235J / 1.0619
3	1	Operating Shaft	1.4104
4	1	Ball	1.4308 / AISI 304L
5	1	Shaft	1.4301
6	2	Belleville washer	1.4310
7	2	Sealing ring holder	1.4301
8	2	Sealing ring	KFC-25
9	3	O-Ring	FEPM
10	2	Bearing bush	St/Bz/PTFE
11	1	Bearing disc	KFC-15
12	2	O-Ring	FKM
13	1	Bush insert	1.4104
14	1	Stem pipe upper part	1.4408
15	1	Grooved pin	1.4305
16	2	Weld-on pipe	P235GH / P265GH

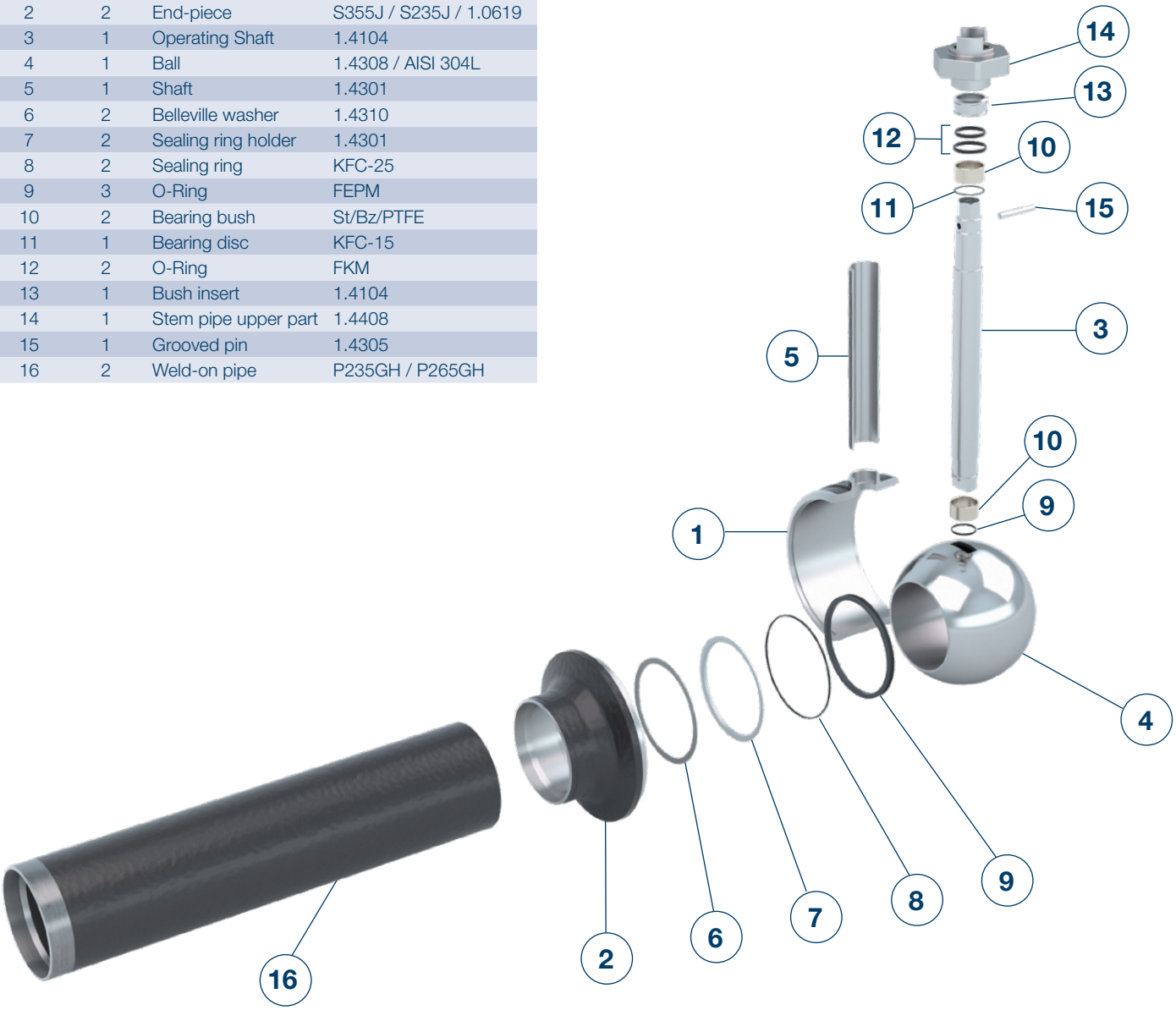

example exploded view
up to DN 125

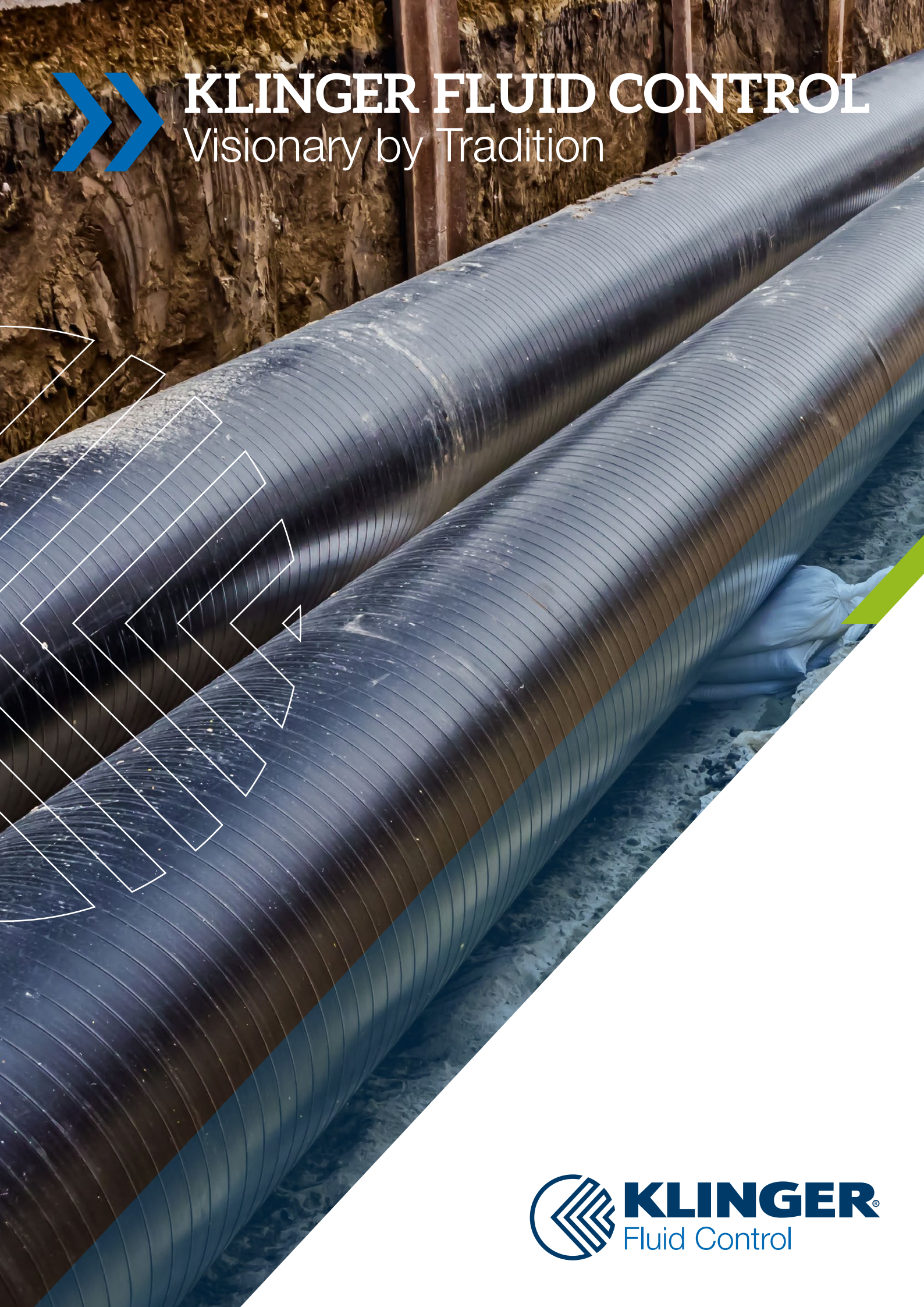

KLINGER FLUID CONTROL

Visionary by Tradition

KLINGER Fluid Control



KLINGER is the world's leading manufacturer and provider of industrial valves.

684 MIO. ANNUAL SALES
An average of 684 million euros is generated by the KLINGER Group per year.

2800 EMPLOYEES
Our global workforce amounts to 2,800 persons worldwide.

80 MARKETS
Our products are supplied to 80 markets all over the world.

60 COUNTRIES
Are home to a group subsidiary or representative.



KLINGER Fluid Control

Your KLINGER distribution partner

KLINGER w Polsce Sp. z o.o.
ul. Farbiarska 69, 02-862 Warszawa
tel.: +48 22 644 01 05
biuro@klinger.pl

KLINGER w Polsce – filia Wrocław
(dawniej: ARA Pneumatik)
ul. Graniczna 186A
54-530 Wrocław
tel. +48 601 941 861

www.klinger.pl

Edition 2024/25 | Typing and printing errors reserved.
Technical changes reserved.

KLINGER Fluid Control GmbH
Am Kanal 8-10 » 2352 Gumpoldskirchen » Austria
Tel: +43 2252 600-0 » Fax: +43 2252 600-100
office@klinger.kfc.at

www.klinger.kfc.at