KLINGER Fluid Control

KLINGER BALLOSTAR® KHE

2-piece ball valves
DN 15 – 200 (1/2" – 8")

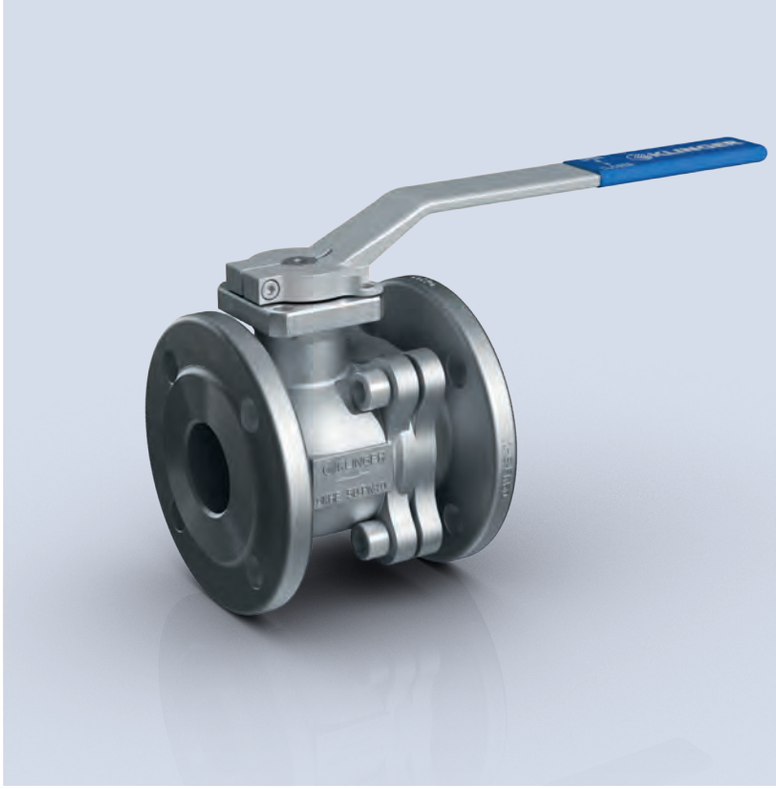



www.klinger.kfc.at

KLINGER FLUID CONTROL

Today for tomorrow

As a subsidiary of the KLINGER Group, KLINGER Fluid Control has been developing, manufacturing and maintaining high-quality industrial valves at the business location Gumpoldskirchen/Austria for more than 125 years. Via the global distribution and service network, KLINGER Fluid Control offers both standardized and tailored products, services as well as solutions for customers around the globe.

Products from KLINGER Fluid Control are characterized by their high level of reliability as well as by an above average lifecycle at a simultaneously very total cost of ownership (TCO). As a solutions partner, KLINGER Fluid Control creates customer benefits with added value. In this regard, the focus is on the following core competences:







ENCOMPASSING SERVICE

» Application expertise
» Product trainings
» Fast quotation and order processing
» Customer-specific special solutions
» Supply of spare parts
» Valve maintenance
» On-site technical support

INNOVATIVE SOLUTIONS

» State of the art development tools
» Product development for different areas of application
» Customer-specific special solutions
» Automation solutions
» Product tests in the company-own technical center
» A wide range of certificates and approvals

OPERATIONAL EXCELLENCE

» Flexible production
» Transparency in the supply chain
» Short delivery times
» ISO 9001 certified quality
» ISO 14001 as well as EMAS certified environmental management system

GREATEST SAFETY

The unique KLINGER sealing system with multiple safeguards

THE SEALING SYSTEM

A Stuffing box
Sealing of the operating stem is achieved by means of a (labyrinth) stuffing box. Only minor contact forces are required for tightness. In this context, the plate spring continuously exerts a contact pressure on the stuffing box – changing temperature and pressure conditions are thus equalized. Virtually maintenance-free, this system is furthermore characterized by a very low setting behavior.

B Secondary body sealing
The graphite seal is located on the connection between the body and the flange end piece and supports tightness to the atmosphere. At the same time, it increases protection against leakages in the event of highly fluctuating temperatures and pressure respectively.

C Diaphragm spring
The stainless steel elastic sealing element is pre-stressed by a diaphragm spring. With the KFC sealing ring and a K-Flon U-sleeve, it forms the flange-end element of the sealing system in the bore.

D Sealing ring
The sealing ring, made of KFC-25, is located directly on the body of the valve and is surrounded on three sides. This prevents the sealing ring from floating in radial direction, against the rear and into the bore.

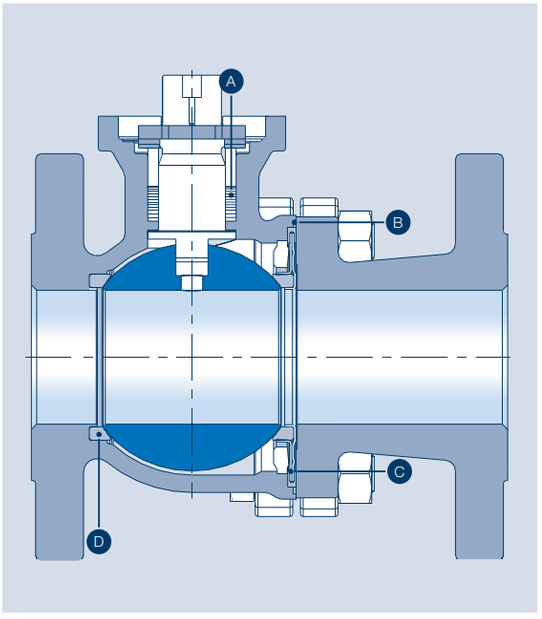

RECOMMENDED MOUNTING DIRECTION

If the elastic sealing element is located upstream, different forces will come into effect. The pressure of the medium exerts the force F_M on the ball and on the upstream-side sealing ring (contact force F_P). The pre-stress force (F_V) also presses the sealing element against the ball. Furthermore, the sealing element is also exposed to the pressure of the medium with the force F_{M1}. Together, they increase the total force exerted on the ball, and the diaphragm spring is simultaneously relieved of stresses. Thanks to the elasticity of the KLINGER sealing system, two sealing areas are constantly maintained in the bore. Due to the fact that KLINGER recommends this mounting direction as standard, it is additionally marked by an arrow on the body. Pressurization, however, is basically possible in both flow directions.

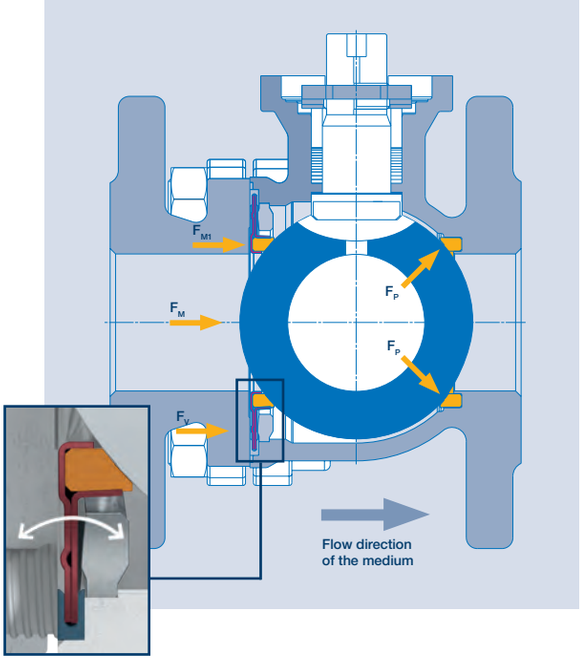

CONSISTENTLY MODULAR

One product – many applications

PRODUCT ADVANTAGES

» Maintenance-free
» Supports pressurization on both sides
» Ball with cylindrical full bore
» Sealing in accordance with EN 12266-1 – leakage rate A
» Modular selection of system components
» Fire Safe
» Antistatic design in accordance with ISO 7121 / EN 1983
» Subsequent automation possible at any time (top flange in accordance with EN ISO 5211)
» Optimal spare parts availability (as a result of common parts with Ballostar® KHA)

SPECIAL TYPES

» Metal seat for abrasive media
» Operating stem sealed by O-rings
» Operating stem extension
» Oxygen version (oil- and grease-free)
» Gas version

PRODUCT DETAILS

PN	16/40, Class 150
DN	15 - 200, ½“ - 8“
Housing	Cast steel, stainless steel, special materials upon request
Ball	Stainless steel
Operating Stem	Stainless steel
Temperature	-60 °C to +300 °C
Design	Flanges (short), full bore
Type	Two-piece ball valve

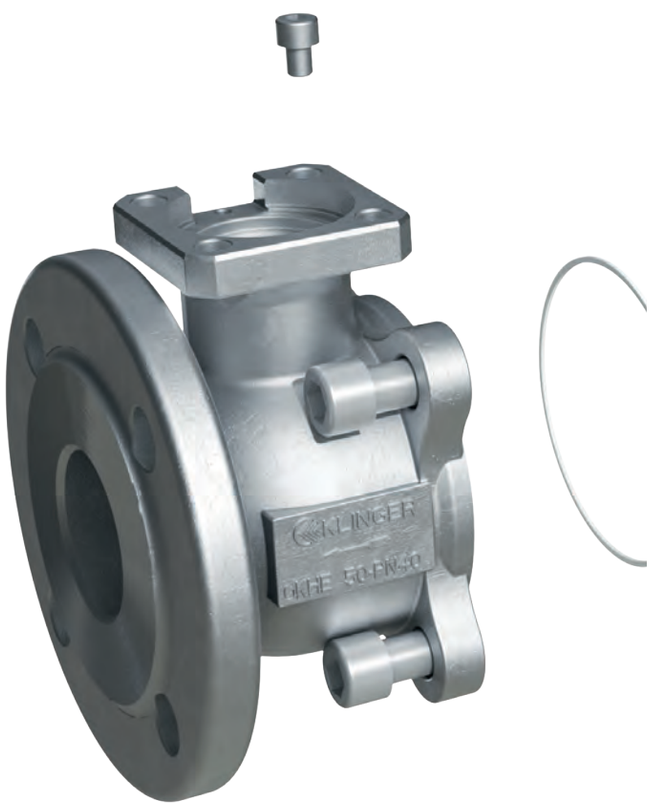

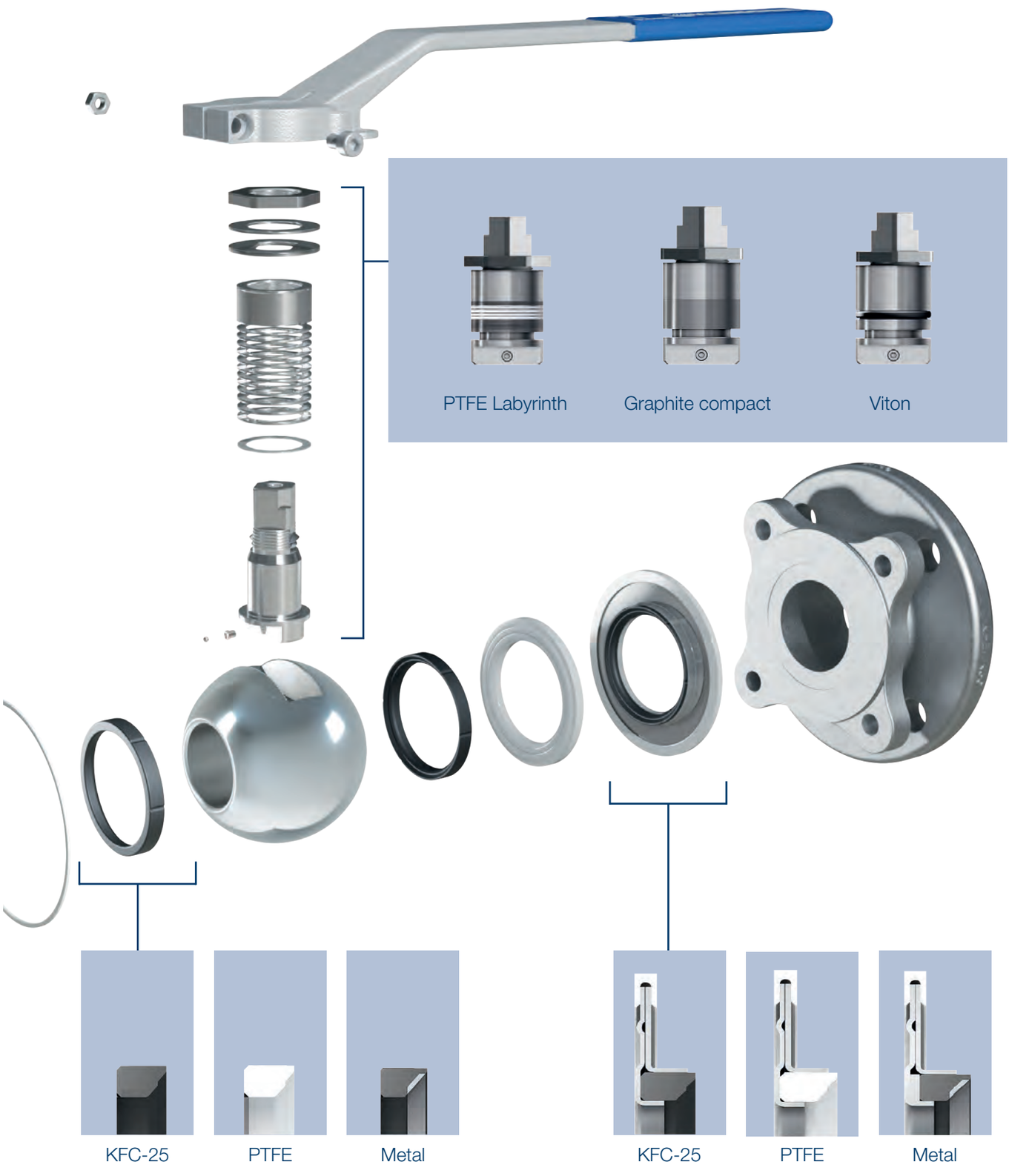
PTFE Labyrinth
Graphite compact
Viton
KFC-25
PTFE
Metal
KFC-25
PTFE
Metal

CERTIFIED QUALITY

The KLINGER Ballostar® KHE lives up to its promises

In terms of its multiple areas of application, the KLINGER Ballostar® KHE leaves no questions unanswered. This is underlined by numerous third-party inspections and certifications. For operators, this means absolute operational safety with guaranteed tightness.

» **Standard antistatic**
The KLINGER Ballostar® KHE features antistatic equipment in accordance with EN 1983 as a standard. In this context, an antistatic ball from DN 50 upwards ensures the electrostatic discharge.

» **Operational safety**
As a standard, the KLINGER Ballostar® KHE comes equipped with a fitting for the installation of a locking device. This negates unintended utilization.

» **Fire Safe**
As a future-proof product, the KLINGER Ballostar® KHE already meets the high demands of the norm EN ISO 10497 in its standard design. The Fire Safe test was carried out by Lloyd's Register in compliance with the norm.

» **Valve on the basis of "TA-Luft"**
The requirements of the German Technical Instructions on Air Quality Control in accordance with VDI 2440 have been clearly fulfilled.

» **Valve with leakage rate A**
The KLINGER Ballostar® KHE meets all the requirements of the norm EN 12266-1 for soft seat sealing elements.

» **Valve for oxygen service**
The BAM Germany has approved the KLINGER Ballostar® KHE for utilization with oxygen at up to max. 60 °C, max. PN 16.

» **Valve for natural gas service**
The KLINGER Ballostar® KHE fulfills the requirements of the norm EN 14141 for ball valves with an operating pressure of up to 40 bar.

» **Valve for gas distribution systems with up to 16 bar**
The KLINGER Ballostar® KHE meets the gas approval requirements in accordance with EN 13774 for gas distribution systems with a permissible operating pressure of up to 16 bar.

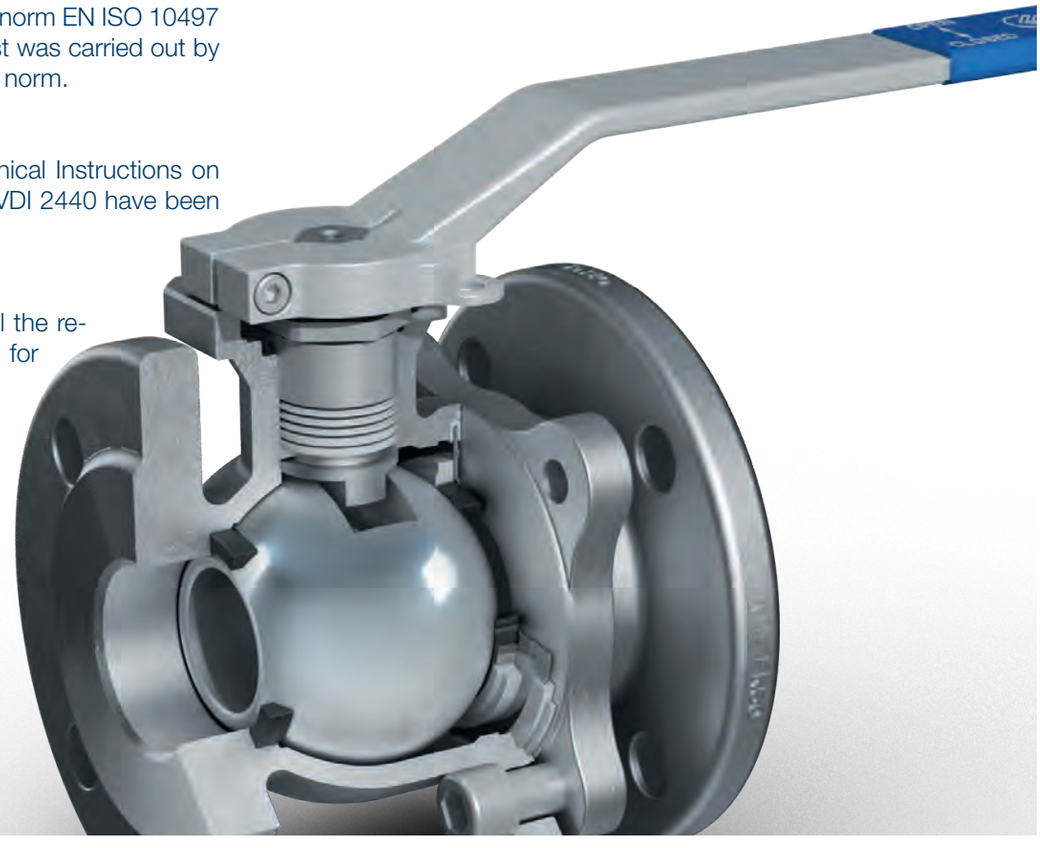

BALLOSTAR®
KHE

Overview of types

DESIGNS IN ACCORDANCE WITH DIN STANDARDS

KHE-FK
Short flange design



» 08

DESIGNS IN ACCORDANCE WITH ASME STANDARDS

KHE-CL
Flange design (ASME)



» 09

BALLOSTAR®
KHE-FK

Short flange design

GENERAL FEATURES
» 2-piece ball valve with full bore
» Floating ball, antistatic, lockable
» Fire Safe
» Modular system components

CONNECTIONS
Flange in accordance with EN 1092-1 (VIII, Xc)

DIMENSIONS
Face-to-face dimensions in accordance with EN 558-1, series 27

ACCEPTANCE TESTING
» Seat leak tightness: EN 12266-1 P12, leakage rate A
» Tightness to atmosphere: EN 12266-1 P11
» Strength: EN 12266-1 P10

AUTOMATION
Flange connection in accordance with ISO 5211, allows for direct mounting of an actuator or by means of brackets. Pneumatic and electrical actuators utilizable.

TEMPERATURE
-60 °C to +300 °C (see pT diagram)

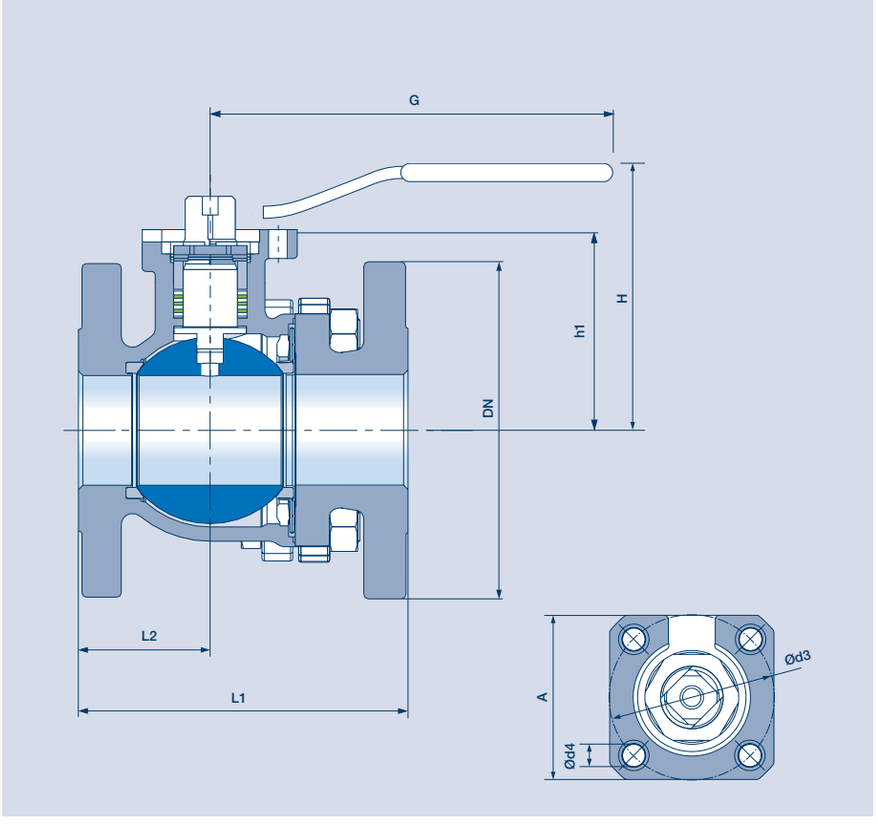

KHE-FK VARIANTS

PRESSURE RANGE PN 40
Material: Steel casting 1.0619 (Material code VIII)
Stainless steel casting 1.4408 (Material code Xc)

	Dimensions						PN		Mounting flange for actuator				Weight
DN	L1	L2	H	G	h1	lz*	VIII	Xc	ISO	A	Ød3	Ød4	kg
15	115	50	80	132	35	4	40	40	F04	42	42	5.8	2.3
20	120	45	94	162	46	4	40	40	F04	42	42	5.8	3.4
25	125	45	98	162	50	4	40	40	F04	42	42	5.8	4.1
32	130	50	106	252	65	4	40	40	F05	50	50	7	6.2
40	140	50	113	252	72	4	40	40	F05	50	50	7	7.8
50	150	60	131	317	90	4	40	40	F07	70	70	10	11.4
65	170	65	144	317	100	8	40	40	F07	70	70	10	16.2
80	180	65	162	502	122	8	40	40	F10	102	102	12	23.9
100	190	75	176	502	135	8	40	40	F10	102	102	12	31.6
125	325	125	211	652	175	8	40	40	F12	125	125	15	64

PRESSURE RANGE PN 16**
Material: Steel casting 1.0619 (Material code VIII)
Stainless steel casting 1.4408 (Material code Xc)

65	170	65	144	315	100	4	16	16	F07	70	70	10	16.2
100	190	75	176	500	135	8	16	16	F10	102	102	12	31.6
125	325	125	211	650	175	8	16	16	F12	125	125	15	64
150	350	140	234	650	195	8	16	16	F12	125	125	15	62.7
200	400	165	300	650	236	12	16	16	F12	140	125	15	99.8

* Number of bores
** In accordance with the norm, the flange face-to-face dimensions of the nominal pipe sizes DN 15-50 as well as DN 80 are the same for PN 16 and PN 40 variants.

Subject to modification of designs and dimensions.

BALLOSTAR®
KHE-CL

Flange design (ASME)

GENERAL FEATURES
» 2-piece ball valve with full bore
» Floating ball, antistatic, lockable
» Fire Safe
» Modular system components

CONNECTIONS
Flange in accordance with ASME B16.5 (VIII, Xc)

DIMENSIONS
Face-to-face dimensions in accordance with ASME B16.10

ACCEPTANCE TESTING
» Seat leak tightness: EN 12266-1 P12, leakage rate A
» Tightness to atmosphere: EN 12266-1 P11
» Strength: EN 12266-1 P10

AUTOMATION
Flange connection in accordance with ISO 5211, allows for direct mounting of an actuator or by means of brackets. Pneumatic and electrical actuators utilizable.

TEMPERATURE
-60 °C to +300 °C (see pT diagram)

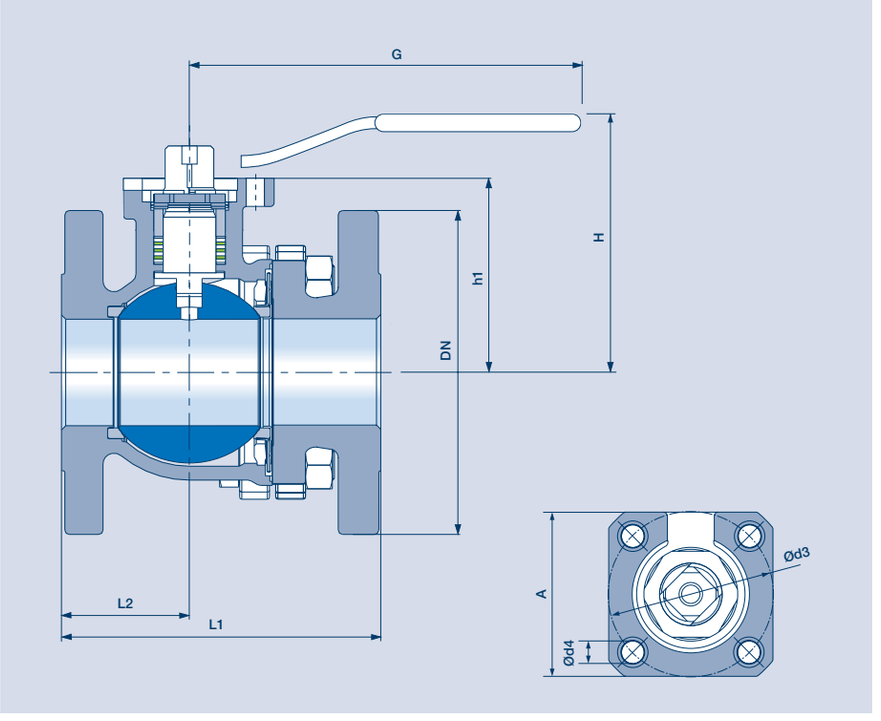

KHE-CL VARIANTS

PRESSURE RANGE CLASS 150
Material: Steel casting 1.0619
(Material code VIII)
Stainless steel casting 1.4408
(Material code Xc)

	Dimensions						Class		Mounting flange for actuator				Weight
NPS	L1	L2	H	G	h1	lz*	VIII	Xc	ISO	A	Ød3	Ød4	kg
1/2"	108	43	81	130	35	4	150	150	F04	42	42	5.8	1.6
3/4"	117	42	95	160	46	4	150	150	F04	42	42	5.8	2.5
1"	127	47	98	160	50	4	150	150	F04	42	42	5.8	3.3
1 1/2"	165	64	114	250	72	4	150	150	F05	50	50	7	7.0
2"	178	60	131	315	90	4	150	150	F07	70	70	10	11.2
2 1/2"	190	66	141	315	100	4	150	150	F07	70	70	10	17.1
3"	203	83	163	500	121	4	150	150	F10	102	102	12	24.3
4"	229	83	176	500	135	8	150	150	F10	102	102	12	34.8
6"	394	184	234	650	195	8	150	150	F12	125	125	15	69.4
8"	457	222	300	650	236	8	150	150	F12	140	125	15	121

AREAS OF UTILIZATION

Pressure and temperature ranges

ASME Standards

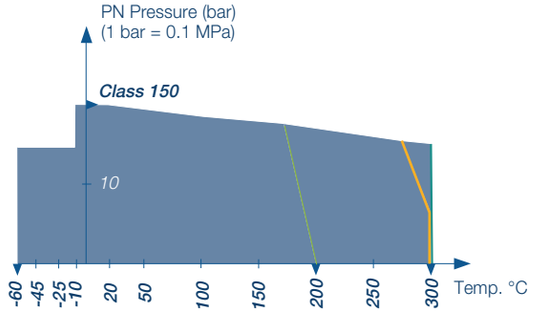

DIN Standards

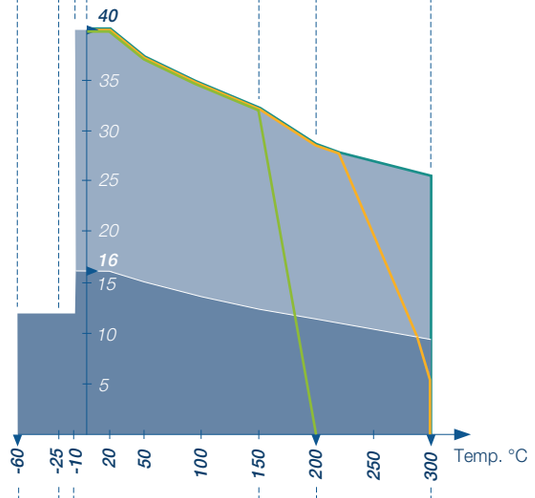

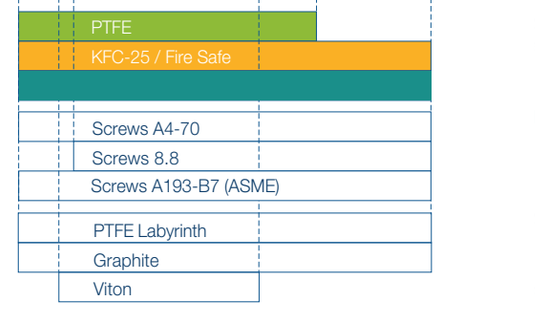

Cast steel

Material code VIII
DN 15 - 125
NPS 1/2" - 4"

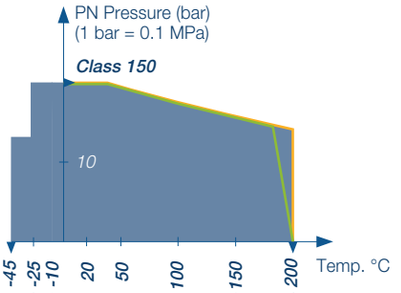

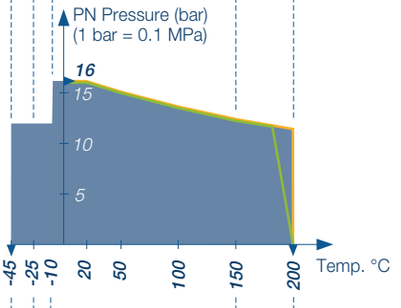

Sealing element and sealing ring

Body screws

Stuffing box

O-Ring (body gasket)

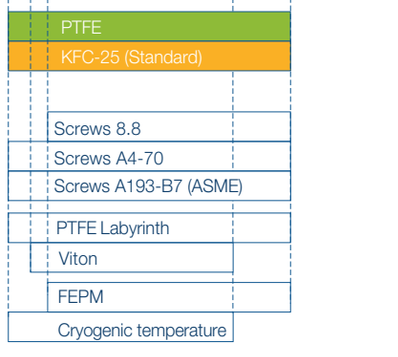

Cast steel

Material code VIII
DN 150 - 200
NPS 6" - 8"

The pT diagrams show the influence of the body materials, sealing materials and operating stems on the area of application of the ball valve.

With these, we offer you safety at the highest level. Insert your operating point into the diagram fields and you will be able to determine whether your safety reserves meet your requirements.

Maximum for PTFE

Maximum for KFC-25

Maximum for metal

PN 40

PN 16 / Class 150

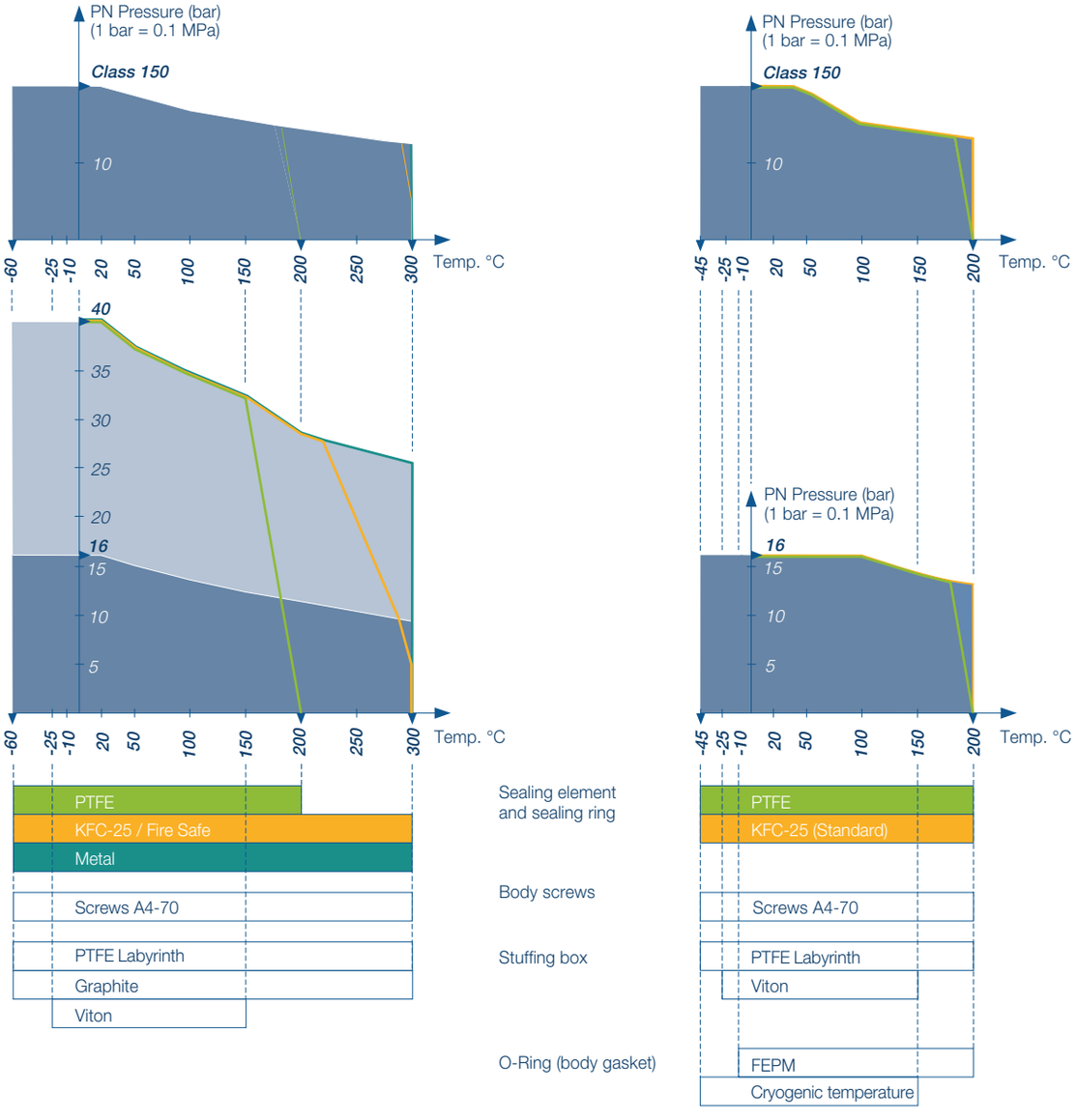

Stainless steel casting

Material code Xc
DN 15 - 125
NPS 1/2" - 4"

Stainless steel casting

Material code VIII
DN 150 - 200
NPS 6" - 8"

AREAS OF UTILIZATION

Stuffing boxes

As a standard, KHE ball valves are fitted with a PTFE Labyrinth stuffing box and a KFC-25 sealing element / ring. The remaining designs listed below can optionally be requested upon order.

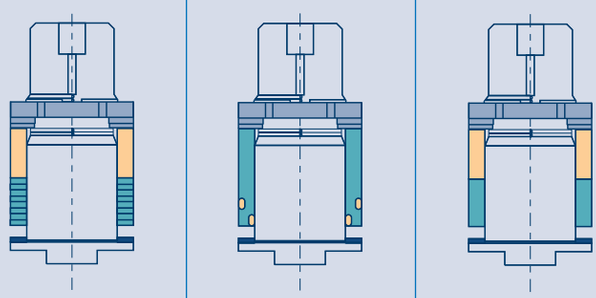

Recommended

Less suitable

Not recommended

		LABYR.	VIT.	GRAPH.
		PTFE Labyrinth	Viton*	Graphite Labyrinth
Media	Water / hot water	■	■	■
	Mineral oil	■	■	■
	Heat-transfer oil	■	■	■
	Liquid gas / cryogenic temperature	■	■	■
	Saturated steam	■	■	■
	Misc. gases	■	■	
	Vacuum / full vacuum	■	■	■
	Hot steam (max. 300 °C)	■	■	■
Operating conditions	Standard application	■		
	High number of cycles	■	■	■
	Frequent temperature changes	■	■	■
	Application across a wide temperature range	■	■	■
	Chemical industry	■	■	■
	Abrasive media	■	■	■
Approvals and Certifications	EN 13774		+	
	EN 14141		+	
	Fire Safe EN ISO 10497	+		
	VDI 2440	+	+	

Sealing elements

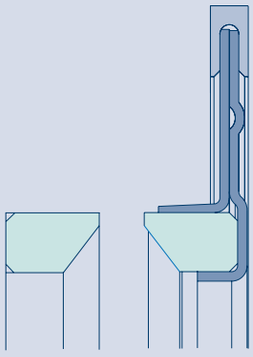

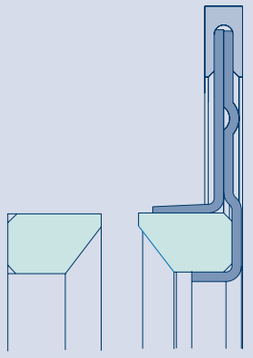

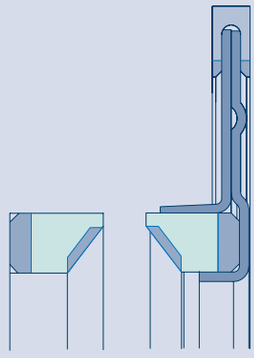

KFC	PTF	MET
KFC-25 (Fire Safe)	PTFE	Metal*
■	■	■
■	■	■
■ **	■	■
■	■	■
■	■	■
■	■	■
■	■	■
■	■	■
■		
■	■	■
■	■	■
■	■	■
■	■	■
■	■	■
+		
+		
+		
+	+	+

* with O-rings | ** Special design

ACTUATOR SELECTION

Actuation torque for the various seals

For standard computations regarding the actuator design, KLINGER recommends the factor 1.5, i.e. using plus 50 %.

KFC-25

Nominal diameter DN		Differential pressure (bar)								
		0	5	10	16	Class 150	25	30	40	Class 300
inch	mm	Torque (Nm)								
½"	15	6	6.2	6.4	6.6	6.8	7	7.2	7.6	8
¾"	20	12	12.4	12.7	13.1	13.4	13.8	14.1	14.8	15.5
1"	25	14	15	16.1	17.3	18.1	19.2	20.2	22.3	24.3
1 ¼"	32	17	18.4	19.9	21.6	22.7	24.1	25.6	28.4	31.3
1 ½"	40	25	27.8	30.6	33.9	36.1	38.9	41.7	47.2	52.8
2"	50	37	40.6	44.3	48.6	51.5	55.1	58.8	66	80
2 ½"	65	60	66.23	72.5	80	85	91.3	97.5	110	200
3"	80	96	114	132	153.6	168	186	204	240	300
4"	100	160	183.8	207.5	236	255	278.8	302.5	350	420
5"	125	270	317.5	365	422	460	507.5	555	650	
6"	150	330	400	450	520	570				
8"	200	485	590	660	760	830				

PTFE

½"	15	5.4	5.6	5.8	6	6.1	6.3	6.5	6.4	7.2
¾"	20	10.8	11.1	11.4	11.8	12.1	12.4	12.7	13.3	14
1"	25	12.6	13.5	14.5	15.6	16.3	17.2	18.2	20	21.9
1 ¼"	32	15.3	16.6	17.9	19.4	20.4	21.7	23	25.6	28.2
1 ½"	40	21.3	23.6	26	28.8	30.7	33.1	35.4	40.1	44.9
2"	50	30.3	33.3	36.3	39.9	42.2	45.2	48.2	54.1	75
2 ½"	65	51	56.3	61.6	68	72.3	77.6	82.9	93.5	180
3"	80	72	85.5	99	115.2	126	139.5	153	180	250
4"	100	120	137.8	155.6	177	191.3	209.1	226.9	262.5	350
5"	125	202.5	238.1	273.8	316.5	345	380.6	416.3	487.5	
6"	150	248	300	338	390	428				
8"	200	364	443	495	570	623				

METAL

½"	15	7.5	7.8	8.2	8.5	8.8	9.1	9.5	10.1	10.8
¾"	20	15	15.7	16.4	17.2	17.8	18.5	19.2	20.6	22
1"	25	18	19.4	20.9	22.6	23.7	25.1	26.6	29.4	32.3
1 ¼"	32	25	26.7	28.3	30.3	31.7	33.3	35	38.3	41.7
1 ½"	40	40	44.8	49.5	55.2	59	63.8	68.6	78.1	87.6
2"	50	55	64.4	73.8	85	92.5	101.9	111.3	130	180
2 ½"	65	85	101.9	118.8	139	152.5	169.4	186.3	220	300
3"	80	140	172.5	205	244	270	302.5	335	400	500
4"	100	250	293.8	337.5	390	425	468.8	512.5	600	750
5"	125	450	580	710	866	970	1,100			

TECHNICAL DETAILS

Flow characteristics for the determination of the nominal diameter

SIZE OF BALL VALVE

Flow rate	Q	in m^3/h
Pressure loss	Δp	in bar
Density	ρ	in kg/m^3
Velocity	w	in m/s
Flow coefficient	K_v	in m^3/h
Pressure loss coefficient	ζ	

Allows for the calculation of:

$$K_v = Q * \sqrt{\frac{\rho}{1000 * \Delta p}}$$

or

$$\zeta = \frac{2 * \Delta p * 10^5}{\rho * w^2}$$

The valve is to be selected in a manner that the K_v-value is greater, or the ζ-value less than the computed value.

FLOW VALUES

DN (mm)	NPS (inch)	ζ	K_{vs}-value
15	½"	0.23	18.8
20	¾"	0.20	35.8
25	1"	0.14	66.8
32	1 ¼"	0.12	118
40	1 ½"	0.11	193
50	2"	0.10	316
65	2 ½"	0.076	607
80	3"	0.067	980
100	4"	0.058	1,645
125	5"	0.051	2,742
150	6"	0.045	4,203
200	8"	0.038	8,131

$$\Delta p = \zeta * \frac{\rho}{2} * w^2 * 10^{-5}$$

or

$$\Delta p = \left(\frac{Q}{K_v}\right)^2 * \frac{\rho}{1000}$$

The characteristic unit for shut-off and control valves is the K_v-value.The values provided in the table apply to a H_2O flow medium with a temperature of 5 - 30 °C, a density of 1000 kg/m^3 and a pressure loss of p = 1 bar at the valve.

In metric measurement systems the characteristic unit utilized is the K_v-value. In countries using inches, the characteristic unit is described by means of the C_V-value. It provides how many US gal/min of water, at a temperature of 60 °F and with a pressure loss of 1 psi, flow through the valve.

KLINGER Fluid Control

Your KLINGER distribution partner

KLINGER w Polsce Sp. z o.o.
ul. Farbiarska 69, 02-862 Warszawa
tel.: +48 22 644 01 05
biuro@klinger.pl

KLINGER w Polsce – filia Wrocław
(dawniej: ARA Pneumatik)
ul. Graniczna 186A
54-530 Wrocław
tel. +48 601 941 861

www.klinger.pl

Edition 2023 | Typing and printing errors reserved

KLINGER Fluid Control GmbH
Am Kanal 8-10 » 2352 Gumpoldskirchen » Austria
Tel: +43 2252 600-0 » Fax: +43 2252 600-100
office@klinger.kfc.at

www.klinger.kfc.at